Week 4

This week I have read a paper about navigation for UAVs.

[1]. Liu, S., Zhang, H., Qi, Y., Wang, P., Zhang, Y., & Wu, Q. (2023). AerialVLN: Vision-and-Language Navigation for UAVs. 2023 IEEE/CVF International Conference on Computer Vision (ICCV), 15338-15348.

Existing tasks introduce

There are a bunch of vision-and-language navigation tasks, such as R2R, RxR, Touch-Down..., however, all these VLN tasks are designed for ground-based agents. This paper introduce a new task for the exploration of vision-and-language navigation in the sky.

Complexity

First of all, unmanned aerial vehicles(UAVs) is becoming increasingly popular recently. Navigation in the sky is significantly different from that on the ground in several aspects. **First**, UAVs has a large action space. **Second**, the environments of UAVs are much bigger and more complex. **Third**, UAVs has a much longer path than ground VLNs. **Fourth**, intelligent agents must learn to avoid getting stuck on objects in 3D space.

The AerialVLN task

The agent is placed in an initial pose, and the agent need to fly to the destination by following a given natural language instruction and its first-person view visual perceptions provided by the simulator.

Dataset

The path were made by experienced multirotor manipulators. And the language instructions were through Amazon Mechanical Turk to collect.
Then divide dataset into the train, val_seen, val_unseen, and test splits. The word "seen" means the visual environment that have been seen in the train split.

Baseline

Cross-Modal Attention(CMA) is a classical baseline model for VLN tasks. The CMA is based on a bi-directional LSTM and divides the whole process into two parts.

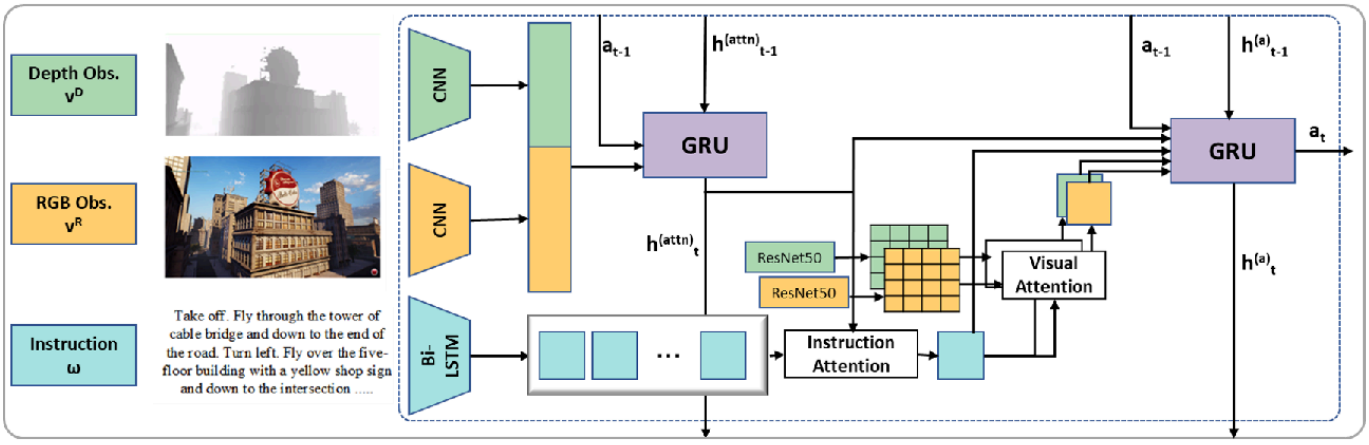

Figure 4: Main architecture of the Cross-Modal Attention model

Results

CMA achieve success rate 1.0% ~ 1.6% on unseen splits of the full dataset(Val_Unseen and Test_Unseen).The success rate is still rather low compared to human performance(~80%).