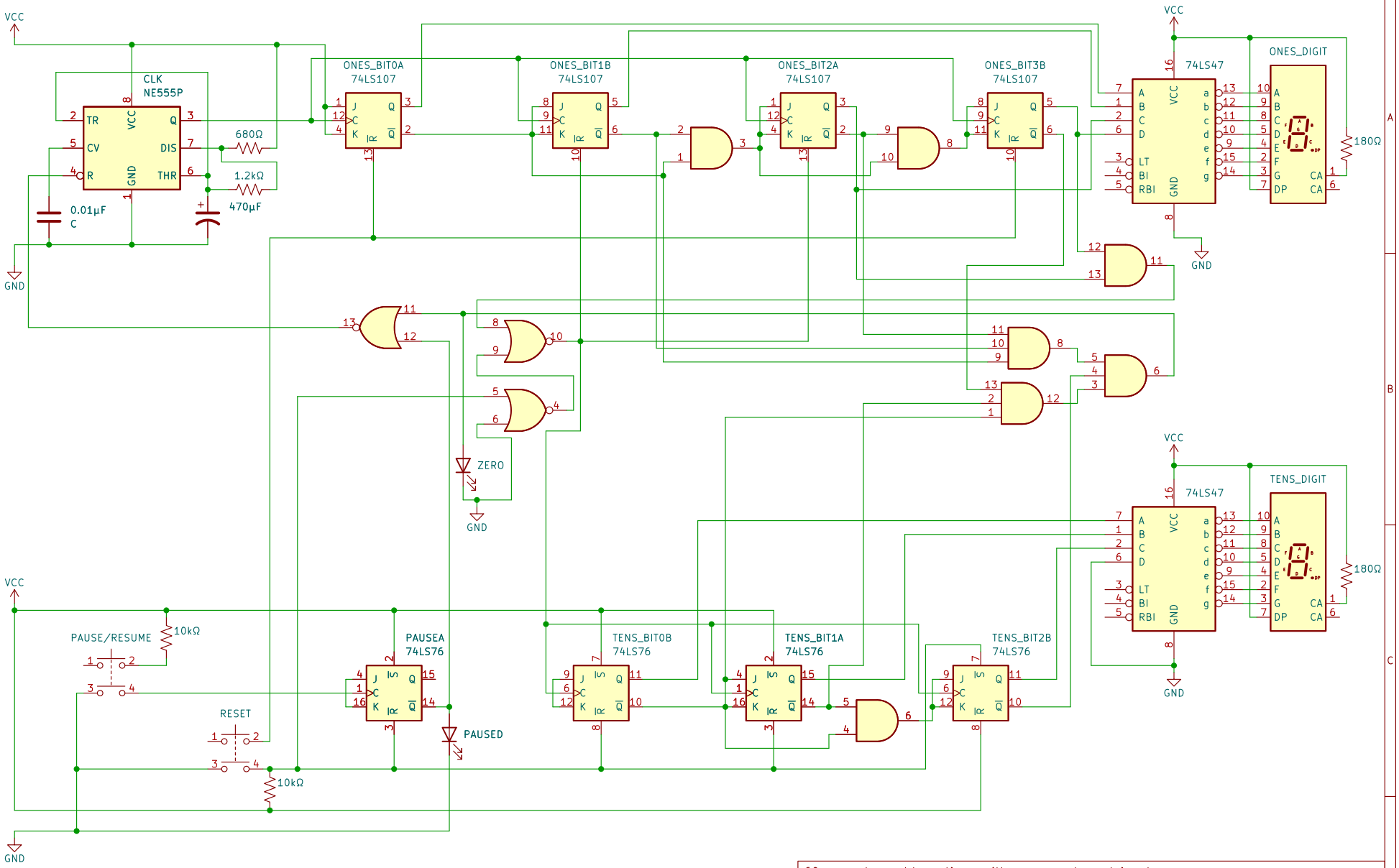

60 second countdown timer with pause and reset inputs.

Developed by Wyatt Geckle

Sheet: /
File: countdown_timer_kicad.kicad_sch

Title: Countdown Timer

Size: USLetter	Date: 2023-04-16	Rev: 1
KiCad E.D.A. eeschema 6.0.11-2627ca5db0~126~ubuntu22.04.1		Id: 1/1