Proceedings of 2024 IEEE
International Conference on Mechatronics and Automation
August 4 - 7, Tianjin, China

Design and Implementation of License Plate Positioning Algorithm based on FPGA

2024 IEEE International Conference on Mechatronics and Automation (ICMA) | 979-8-3503-8807-7/24/$31.00 ©2024 IEEE | DOI: 10.1109/ICMA61710.2024.10633140

Qianwen Lou, Xiwei Peng, Haizhi Gao*
Faculty of Automation
Beijing Institute of Technology
Beijing, China
qianoween@163.com

Xiaoxing Feng, Ze Li
Jiangsu Longyuan Zhenhua Maring Engineering Co, Ltd
Jiangsu, Nantong, China

Abstract - Compared to image processing platforms such as CPU and GPU, FPGA have advantages in terms of real-time performance. The license plate positioning method based on Field Programmable Gate Array (FPGA) proposed in this paper only takes 13ms to process a frame of 640*480 images, which takes 19ms based on GPU and 58ms based on CPU[1]. The image preprocessing method of binarization by single-channel color requires a high degree of chromaticity of the license plate part in the image. Especially when the color of the license plate is similar to the car body color, the recognition accuracy is very low. The method of binarization using two-channel mask proposed in this paper can effectively improve the accuracy of license plate recognition when the color of the license plate is similar to that of the car body or the chroma of the license plate is insufficient. Because in the actual installation of the license plate, there are four rivets on the upper and lower edges. So in the image after Sobel edge detection, the rivets affect the completeness of the upper and lower edges, resulting in irregular lines on the upper and lower edges of the license plate. When using the traditional pole method to locate the upper and lower boundaries, the error is more than 12%. When using the three-order matrix method proposed in this paper to locate the boundaries of the license plate, the error value of the four boundaries is no more than 5%, compared with the manually calibrated coordinates.

Index Terms - License Plate Positioning, FPGA, Two-channel Masking, Sobel Edge Detection, Projection.

I. Introduction

License plate recognition technology plays an important role in smart transportation, smart security and other systems, and it is of great significance to smart city management[2]. Then license plate positioning plays a key role in the license plate recognition system.

With the increase of algorithm complexity, the hardware platforms have become a critical constraint on system performance[3]. The initial license plate recognition system is applied to the PC[4], but the occupancy rate of the system is high, the efficiency is not satisfactory enough and it can't meet the practical demand[5]; with the development of the embedded platform, the license plate recognition system based on DSP can make full use of the image processing ability of the DSP chip, but the power consumption is very high, and the image with high resolution can't be processed[6][7] ; the development cost of ARM processor is low and the algorithm execution is simple, but it can't support complex mathematical calculation, which is a certain degree of limitations[8][9]; the license plate recognition system based on FPGA can effectively improve the processing speed of the algorithm, and obtain higher computing performance[10]. Because using the pipelined data processing method, FPGA can process data synchronously while acquiring images, which is superior in speed.

The license plate positioning algorithm is the most critical content of the license plate recognition system. At present, the algorithm of license plate positioning includes: license plate positioning based on edge detection[11]. In 2021, the improved dark channel algorithm was combined with the single-scale Retinex dehazing algorithm to achieve accurate positioning of license plates in haze weather[12]; License plate positioning based on color space conversion[13], grayscale image texture features[14] and mathematical morphological method[15]. The combination of HSV color space and mathematical morphological method realizes license plate positioning[5], but it is highly dependent on color and edge, and the positioning accuracy is very low when applied to unclear images; License plate positioning based on deep learning algorithms[16]. After the image is binarized, the area that does not conform to the prior knowledge of the license plate is removed, then the heuristic search is carried out on the remaining area, and the starting position of the license plate is found through the convolutional neural network and the sliding window, which can realize the license plate positioning in the complex environment[17]. But the machine learning algorithm needs a large amount of data for training, and the algorithm is very complex and not easy to realize[18]. Therefore, traditional license plate positioning algorithms based on color features and edge features rely on the pixel quality of license plates. When the color of the license plate is similar to the background or the license plate edges is obscured, it is difficult for traditional algorithms to locate accurately. Although the algorithm based on deep learning is more accurate, the program is complex and it is very difficult to implement on FPGA.

In this paper, the algorithm is designed according to the characteristics of the FPGA pipeline data processing. It only takes 13ms to process a frame of 640*480 images, compared with 19ms based on GPU and 58ms based on CPU. According to the color characteristics and shape characteristics of the license plate, this paper innovatively proposes the two-channel mask method to binarize the license plate, and proposes the

Authorized licensed use limited to: Shenzhen Technology University. Downloaded on March 11,2026 at 14:18:41 UTC from IEEE Xplore. Restrictions apply.

three-order matrix method to locate the license plate. The two-channel mask method effectively avoids the interference caused by the car body with a similar color to the license plate. The three-order matrix positioning method eliminates the interference caused by the four installation rivets on the license plate. The error value of the four boundaries is no more than 5%, compared with 12% using traditional method. So the method improves the recognition accuracy of four boundaries of the license plate.

II. General design

In this paper, FPGA is used to realize the coarse and precise positioning of the license plate. The overall process is shown in Fig. 1. Where Fig. 1(a) is the algorithm flow diagram and Fig. 1(b) is the RTL circuit diagram.

As shown in Fig. 1(a), the coarse positioning is divided into color-based and edge-based. Coarse positioning based on color features refers to masking the RGB and HSV channels respectively, combining the results, and performing edge detection after expansion, while coarse positioning based on edge features refers to grayscale rendering, median filtering, edge detection, and finally expansion. Precise positioning refers to the merging of the results of two kinds of coarse positioning, and the projection in the vertical and horizontal directions. Then, the boundary coordinates are obtained by constructing the three-order matrix proposed in this paper, and finally the image is intercepted.

III. Algorithm design

A. *two-channel mask*

Binarization is a key step in license plate positioning algorithms, which pre-processes the image to minimize noise and interference from non-license plate areas. According to the color characteristics of the license plate, a two-channel mask method is proposed to binarize the image.

RGB color space is through the change of red, green and blue three color channels and the superposition between them to obtain all varieties of colors that human vision can perceive, RGB represents red, green, blue three channel colors, is one of the most widely used color system[19]. HSV is a color space created based on the intuitive properties of color, also known as a hexagonal pyramid model, in which the parameters of color are: hue (H), saturation (S), and value (V). Hue is measured by angle, the value range is 0°~360°; Saturation represents the degree of color close to spectral color, the value range is 0%~100%, the higher the saturation, the closer the color is to the spectral color; Value represents the degree of brightness of the color, and the value range is 0% (black)~100% (white)[20]. The HSV color space is shown in Fig. 2.

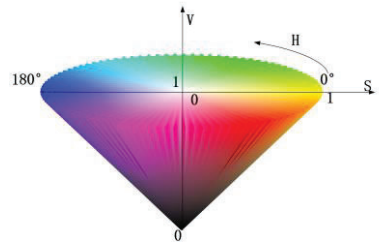

Fig. 2 The HSV color space

Let (r, g, b) be the red, green, and blue coordinates of a color respectively, and their values are between 0~255, let *max* be the largest of r, g, b, and *min* be the smallest. The HSV space is (h, s, v), where $h \in [0,180)$, s, $v \in [0,255]$. The conversion formula is (1), (2), (3)[21].

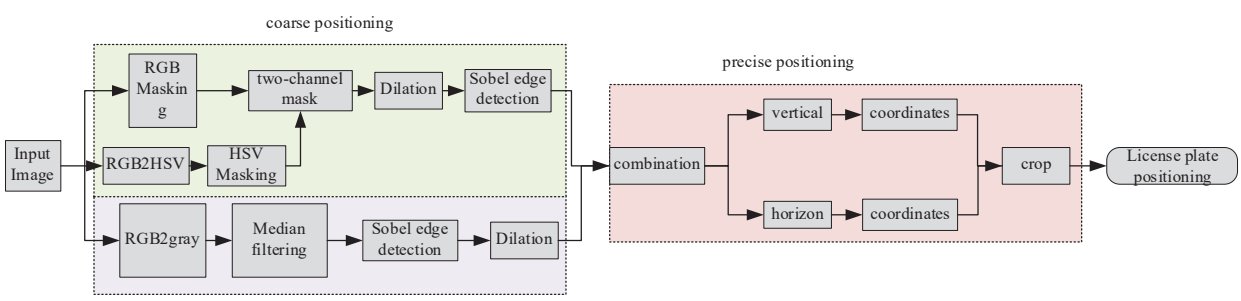

(a)

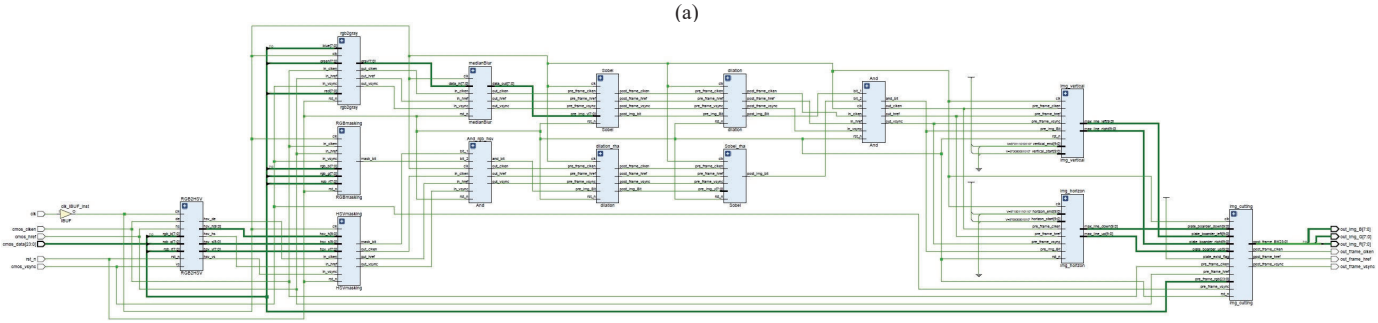

(b)

Fig. 1 The overall process of the license plate positioning

Authorized licensed use limited to: Shenzhen Technology University. Downloaded on March 11,2026 at 14:18:41 UTC from IEEE Xplore. Restrictions apply.

$$h=\begin{cases} 0^0,\ \text{if } max=min \\ 30^0\times\dfrac{g-b}{max\text{-}min}+0^0,\ \text{if } max=r \text{ and } g\geq b \\ 30^0\times\dfrac{g-b}{max\text{-}min}+180^0,\ \text{if } max=r \text{ and } g<b \\ 30^0\times\dfrac{g-b}{max\text{-}min}+60^0,\ \text{if } max=g \\ 30^0\times\dfrac{g-b}{max-min}+120^0,\ \text{if } max=b \end{cases} \tag{1}$$

$$s=\begin{cases} 0,\ \text{if } max=0 \\ (1-\dfrac{min}{max})*255,\ \text{otherwise} \end{cases} \tag{2}$$

$$v=max \tag{3}$$

Channel Masking refers to the use of selected images, graphics or objects, to completely or partially occlude the image to be processed, to control the area or process of image processing. A specific image or object used for overlay is called a mask or template, and during image processing, the mask is usually an array of two-dimensional matrices[22]. The image mask of this system is multiplied with the pre-made region of interest mask and the image to be processed to obtain an image of the region of interest, the value of the region of interest image remains unchanged, and the value of the image outside the region is set to 0.

The mask operation checks if pixels in the image lie between the given boundaries. The *Dst(x, y)* is set to 1 if *src(x, y)* is within the specified thresholds and otherwise 0. The formula for this function is (4).

$$Dst(I)=lowerb\leq src(I)\leq upperb \tag{4}$$

Where:

- (x, y) is the spatial coordinate of the pixel.
- The *lowerb* is the lower threshold value.
- The *upperb* is the upper threshold value.

Then performing an AND operation on the image after the RGB and HSV channel masking to keep the overlapping part, and set the image value to 0 for the non-overlapping part. In this way, the common part of the two channel masks is obtained, which improves the accuracy of license plate positioning and removes some of the interfering areas.

B. Sobel edge detection

The Sobel edge detection algorithm has a good effect on grayscale gradient and noisy images, and is more accurate for edge positioning. The Sobel operator is a combination of Gaussian smoothing and differential manipulation, so it is highly resistant to noise[23]. The Sobel algorithm Computes the gradients of input image in both x and y direction by convolving the kernel with input image being processed. Sobel convolution factors are (5), (6).

$$Gx=\begin{bmatrix} -1 & 0 & +1 \\ -2 & 0 & +2 \\ -1 & 0 & +1 \end{bmatrix} \tag{5}$$

$$Gy=\begin{bmatrix} +1 & +2 & +1 \\ 0 & 0 & 0 \\ -1 & -2 & -1 \end{bmatrix} \tag{6}$$

The detailed calculation is:

$$\begin{aligned} &Gx= \\ &(-1)*f(x-1,y-1)+0*f(x,y-1)+1*f(x+1,y-1) \\ &+(-2)*f(x-1,y)+0*f(x,y)+2*f(x+1,y) \\ &+(-1)*f(x-1,y+1)+0*f(x,y+1)+1*f(x+1,y+1) \end{aligned} \tag{7}$$

$$\begin{aligned} &Gy= \\ &1*f(x-1,y-1)+2*f(x,y-1)+1*f(x+1,y-1) \\ &+0*f(x-1,y)+0*f(x,y)+0*f(x+1,y) \\ &+(-1)*f(x-1,y+1)+(-2)*f(x,y+1) \\ &+(-1)*f(x+1,y+1) \end{aligned} \tag{8}$$

Where: *f(a, b)* represents the gray value of the point *(a, b)*.

The horizontal and vertical grayscale values of each pixel of the image are combined by (9) to calculate the size of the grayscale at that point:

$$G=\sqrt{Gx^2+Gy^2} \tag{9}$$

If the gradient G is greater than the threshold, the point *(x, y)* is considered to be the edge point. The gradient direction can then be calculated using (10).

$$\theta=\arctan(\frac{Gx}{Gy}) \tag{10}$$

In the FPGA, the IP core CORDIC is used to calculate the modulus of the vector *{dx, dy}* and its angle. Compared to using a multiplier or divider, it saves a lot of resources.

C. Three-order matrix method

According to the shape characteristics of the license plate, the three-order matrix method is proposed to locate the license plate. Firstly, the image after edge detection is projected vertically and horizontally, and the pixel accumulation value of each row and column is calculated. Then, the 3×3 matrix is used to traverse the pixel accumulation values in the two directions and is multiplied with a three-order matrix operator. And finally the multiplication result is compared with the threshold value to obtain the boundary coordinates. The upper and lower boundaries of the license plate can be obtained by projecting the horizontal direction, and the left and right boundaries of the license plate can be obtained by projecting the vertical direction.

Authorized licensed use limited to: Shenzhen Technology University. Downloaded on March 11,2026 at 14:18:41 UTC from IEEE Xplore. Restrictions apply.

Taking the horizontal projection as an example, the specific process of calculating the upper and lower boundaries is given below.

After the horizontal projection, the resulting pixel accumulation value is *N(y)*, where *N* is the pixel accumulation value of the *y* row and the *y* is the coordinate of the image row. Traversing with nine-beat data yields the 3×3 matrix (11):

$$F = \begin{bmatrix} N_9(y_9) & N_8(y_8) & N_7(y_7) \\ N_6(y_6) & N_5(y_5) & N_4(y_4) \\ N_3(y_3) & N_2(y_2) & N_1(y_1) \end{bmatrix} \tag{11}$$

Construct a three-order matrix operator:

$$F1 = \begin{bmatrix} 1 & 1 & 0 \\ 1 & 1 & 0 \\ 1 & 0 & 0 \end{bmatrix} \tag{12}$$

Multiply the matrix *F* with the operator:

$$K = F \times F1 \tag{13}$$

Finally, the members of the *K* were selected for accumulation and comparison with the threshold:

$$T1 = \sum_{j=1}^{3} K(1, j) \tag{14}$$

$$T2 = \sum_{j=1}^{3} K(3, j) \tag{15}$$

The threshold is:

$$Theshold = (\sum_{k=0}^{M} N_k) / M \tag{16}$$

Where:

k is the coordinate of the row where the cumulative value of pixels is not 0;

M is the number of rows where the cumulative value of pixels is not 0;

N_k is the cumulative value of pixels that is not 0.

The judging criteria is: if *T1<Threshold* and *T2>5*Threshold*, it can be judged to be a valid rising edge. The first occurrence of the valid ascendant is the corresponding line coordinates, which is the lower boundary of the license plate. If the coordinates of the lower edge row of the license plate area are Y_{down}, and y_5 in this example is the coordinate of the corresponding row of the first valid rising edge, then:

$$Y_{down} = y_5 \tag{17}$$

When judging the upper boundary of the license plate, it is to find the valid falling edge of the cumulative value of the line. If *T1>5*Threshold*, and *T2<Threshold*, you can judge that it is a valid downward edge at this point, and after traversing all the projection data, the last valid falling edge corresponds to the line coordinates that are the upper boundary of the license plate.

In the same way, the left(X_{left}) and right(X_{right}) boundaries of the license plate can be calculated.

IV. Experimental Results and Comparative Analysis

A. Results and analysis of two-channel and single-channel masking

In the study of license plate recognition, the HSV three-channel threshold method is mostly used for binarization, and H represents the chromaticity component[24]. Therefore, in the Comparative experiments, the image is firstly converted to HSV three channels, then is binarized by the H channel.

In this section, six representative images are selected for comparative analysis, as shown in Fig. 3. Fig. 3(a1) is the picture of a clear license plate and a single pure background color, Fig. 3(b1) is the picture of a car license plate similar to the color of the car body, Fig. 3(c1) is the picture of the car plate that is reflective, and Fig. 3(d1) is the picture that having something similar to the color of the license plate in the picture. Fig. 3(e1) and Fig. 3(f1) are yellow and green license plates. Fig. 3(a2) ~ Fig. 3(f2) are the results of HSV-channel binarization. Fig. 3(a3) ~ Fig. 3(f3) are the results of RGB-channel binarization. Fig. 3(a4) ~ Fig. 3(f4) are the results of the two-channel mask method.

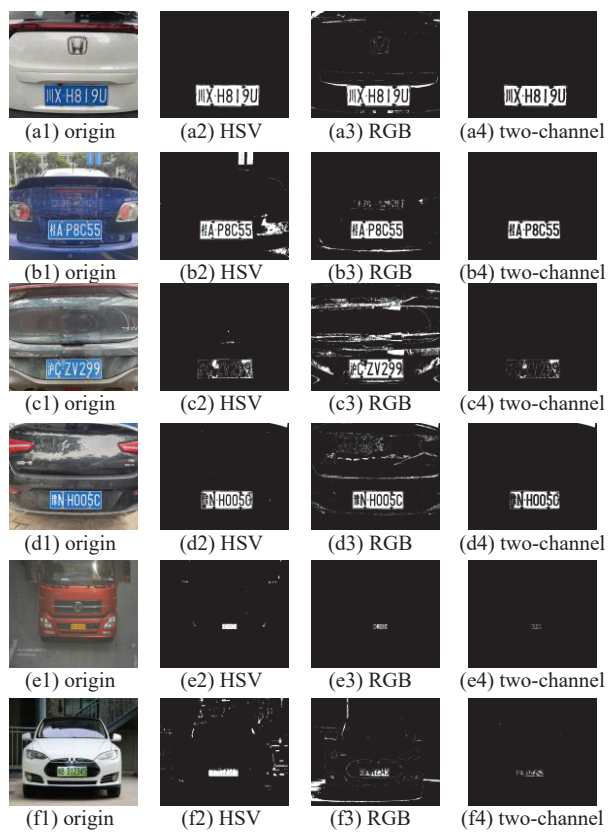

Fig. 3 Results of the two binarization methods

The experiment finds that: the range of blue license plates is: {100, 40, 40}<{H, S, V}<{155, 255, 255}, {0, 0, 120}<{R,

Authorized licensed use limited to: Shenzhen Technology University. Downloaded on March 11,2026 at 14:18:41 UTC from IEEE Xplore. Restrictions apply.

G, B}<{150, 150, 255}; the range of yellow license plates is: {21, 40, 40}<{H, S, V}<{55, 255, 255}, {200, 150, 0}<{R, G, B}<{255, 255, 100}; the range of green license plates is: {70, 40, 40}<{H, S, V}<{140, 255, 255}, {40, 100, 0}<{R, G, B}<{170, 255, 150}.

From the experimental results, when the color of the car body is very similar to the color of the license plate, the single-channel mask method cannot accurately identify the position of the license plate. For example, the car body in Fig. 3(b1) is blue, which is very similar to the blue color of the license plate, and the single-channel threshold method cannot distinguish the position of the license plate and the car body, as shown in Fig. 3(b2) and Fig. 3(b3). Not only the license plate area, but also a large part of the body area is recognized as the license plate area. In addition, when the color of the license plate is not obvious enough, such as in Fig. 3(f1). The single-channel mask method can't identify the license plate area as shown in Fig. 3(f2) and Fig. 3(f3), in which the license plate has a large area of interference. However, the recognition result of the two-channel mask is better. As shown in Fig. 3(b4) and Fig. 3(f4), in the case that the license plate is close to the color of the car body, or the color of the license plate is uneven, the area of the license plate is still accurately identified. Therefore, using the two-channel mask method to binarize the image has better fault tolerance. So the method greatly reduces the quality requirements of the captured pictures, and has better practical value.

B. *Results and analysis of precise positioning*

Because there are four installation rivets on the upper and lower edges of the license plate, in the process of edge detection, the recognition effect of the upper and lower edges is poor, and the data of horizontal projection are greatly disturbed. The traditional method is to find the first and last pole of the projected pixel data and take the coordinates of the poles as the edges[25], which has high requirements for the sharpness of the edges.

The edge coordinates are measured according to the three-order matrix method, and then the images are cut according to the coordinates. Fig. 4 is the results of precise positioning. For Fig. 3(a1) ~ Fig. 3(d1), the results of the Sobel detection after two-channel masking and dilation are shown in Fig. 4(a1) ~ Fig. 4(d1), the results of the dilation after median filtering and Sobel detection are shown in Fig. 4(a2) ~ Fig. 4(d2). Fig. 4(a3) ~ Fig. 4(d3) is the combination of Sobel detection results. Fig. 4(a4) ~ Fig. 4(d4) is the cut images according to the coordinates of the three-order matrix method. Fig. 4(a5) ~ Fig. 4(d5) is the cut images according to the coordinates of the traditional pole method.

From Fig. 4(a5), the upper edge coordinate of the license plate is too small, so that the license plate is incomplete. From Fig. 4(b5), due to the presence of rivets, the horizontal projection value of the upper and lower edges is too small, and the traditional pole method does not find the pole that meets the requirements, and the license plate area cannot be obtained.

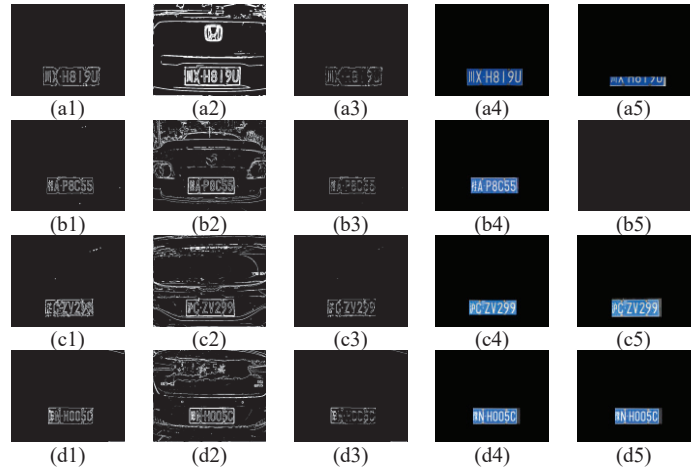

Fig. 4 Results of precise positioning

As can be seen from Fig. 4, the three-order matrix method can demarcate the complete license plate area.

Then, the specific coordinate data is compared. Three methods were used to calibrate the position of the license plate, including the pole method, the matrix method and the calibration method. The calibration method is to manually calibrate the position information of the license plate, which can be regarded as the standard value. For each coordinate of each image, three data were obtained by three methods, and the comparison results are shown in Table I. Where, Y_{up}, Y_{down}, X_{left}, and X_{right} are the coordinates of the top, bottom, left, and right boundaries of each image, respectively.

TABLE I
LICENSE PLATE LOCATION DATA

coordinate	method	Fig. 3(a1)	Fig. 3(b1)	Fig. 3(c1)	Fig. 3(d1)
Y_{down}	pole	50	0	50	93
	matrix	51	90	52	93
	standard	54	95	60	100
Y_{up}	pole	100	0	150	179
	matrix	148	171	148	179
	standard	143	180	140	170
X_{left}	pole	181	210	194	212
	matrix	185	199	194	212
	standard	178	200	190	210
X_{right}	pole	502	441	476	475
	matrix	507	453	456	478
	standard	491	450	457	456

Define the error of the up or down boundaries is *E1*, the error of the left or right boundaries is *E2*, then:

$$E1 = \frac{(boundary\ coordinate\ -\ standard\ value)}{image\ height} \tag{18}$$

$$E2 = \frac{(boundary\ coordinate\ -\ standard\ value)}{image\ width} \tag{19}$$

The error and the average error of the two methods is calculated according to (18) and (19), and shown in the Table II.

Authorized licensed use limited to: Shenzhen Technology University. Downloaded on March 11,2026 at 14:18:41 UTC from IEEE Xplore. Restrictions apply.

TABLE II
LICENSE PLATE LOCATION ERROR

method	coordinate	Fig. 3(a1)	Fig. 3(b1)	Fig. 3(c1)	Fig. 3(d1)	Ave
pole	Y_{down}	0.8%	19.8%	2.1%	1.5%	6%
	Y_{up}	9.0%	37.5%	2.1%	1.8%	12.6%
	X_{left}	0.5%	1.6%	0.6%	0.3%	0.7%
	X_{right}	1.7%	1.4%	3.0%	3.0%	2.3%
matrix	Y_{down}	0.6%	1.0%	1.7%	1.5%	1.2%
	Y_{up}	1.0%	1.9%	1.7%	1.9%	1.6%
	X_{left}	1.1%	0.2%	0.6%	0.3%	0.5%
	X_{right}	2.5%	0.5%	0.2%	3.4%	1.6%

From Table II, it can be seen that when finding the left and right edges of the license plate (X_{left} and X_{right}), the average error of the two methods is close, both are less than 3%. However, when finding the upper and lower edges of the license plate (Y_{up} and Y_{down}), the average error of the two methods is very different. When judging by the pole method, the average error of the lower boundary is 6%, and the average error of the upper boundary reaches 12.6%. While the average error of the upper and lower boundaries of the matrix method is 1.6% and 1.2%. So the average error of the three-order matrix method is much smaller than the error of the traditional pole method. After a larger number of image tests, the coordinates of the edge obtained by the matrix method are all within 5%.

Therefore, the positioning method of constructing a three-order matrix using nine-beat data can judge the edges well, especially the upper and lower edges, and can make up for the interference caused by the installation rivets of the license plate.

V. CONCLUSION

In this paper, the positioning of license plates is realized based on FPGA. The two-channel mask method is designed to binarize the image, which overcomes the interference of the similarity between the color of the car body and the license plate, and improves the inclusiveness of the chroma of the license plate; The three-order matrix method proposed in this paper can accurately judge the edge of the license plate , and solve the problem of the incoherence of upper and lower edges caused by the installation rivets. The coordinates error of the edge obtained by the matrix method are within 5%, compared with 12% by the traditional method; This paper calls the IP core Block Memory Generator, and RAM-based Shift Register and Cordic to implement the above license plate positioning algorithm on the FPGA. The time required for a frame of 640*480 image is only 13ms, which meets the requirements of speed. The next step is to correct inclined license plates and recognize license plates with more complex background.

REFERENCES

[1] F. Qin, "Parallel research on key technologies of license plate positioning based on GPU," M.S. thesis, Chongqing Univ., Chongqing, China, 2011.

[2] M. Xu, "Research and implementation of license plate recognition system based on FPGA," M.S. thesis, Wuhan Institute of Technology Univ., Wuhan, China, 2022.

[3] Garcia P, Compton K, and Schulte M, "An overview of reconfigurable hardware in embedded systems," *EURASIP Journal on Embedded Systems*, pp. 1-19, 2006.

[4] C. Wang, and J. Liu, "License plate recognition system," in *12th IEEE International Conference on FSKD*, 2015, pp. 1708-1710.

[5] A. Zhang, "Design of license plate recognition system in complex scene based on FPGA," M.S. thesis, Xi'an Shiyou Univ., Xi'an, China, 2023.

[6] Arth C, Limberger F, and Bischof H, "Real-time license plate recognition on an embedded DSP-platform," in *2007 IEEE conference on computer vision and pattern recognition*, 2007, pp. 1-8.

[7] D. Hou, "Research on license plate recognition technology based on DSP," M.S. thesis, Anhui Univ. of Science and Technology, Anhui, China, 2013.

[8] H. Cheng, Q. Li, and Y. Kai, "Design of license plate recognition system based on Cortex-A8 processor," *Computer and Modernization*, vol.1, no.05, pp. 122-126, 2014.

[9] Goodacre J, and Sloss A N, "Parallelism and the ARM instruction set architecture," *Computer*, vol.38, no.7, pp. 42-50, 2005.

[10] L. Peng, "Research on image restoration algorithm and FPGA implementation technology," M.S. thesis, Harbin Institute of Technology, Harbin, China, 2007.

[11] D. Jia, "Research on license plate recognition algorithm of new energy vehicles in specific environment," M.S. thesis, Jilin Univ., Jilin, China, 2019.

[12] J. Xue, J. Hei, and K. Li, "Efficient Image Dehazing by Improving Retinex Algorithm," in *IEEE 39th Chinese Control Conference*, 2020, pp. 6444-6449.

[13] J. Dun, S. Zhang, and X. Ye, "Chinese license plate localization in multi-lane with complex background based on concomitant colors," *IEEE Intelligent Transportation Systems Magazine*, vol.7, no.3, pp.51-61, 2015.

[14] Z. Wang, and H. Cui, "A preprocessing method for license plate positioning based on texture feature extraction," *Computer Application Research*, vol.l, pp. 255-257, 2004.

[15] Wu Cheokman, Lei Chan'on, and Chan Honweng, "A Macao License Plate Recognition system," in *Proceedings of the 4th International Conference on Machine Learning and Cybernetics*, Guangzhou, 2005, pp. 4506-4510.

[16] J. Meng, "Research on license plate recognition based on convolutional neural network," M.S. thesis, Beijing Univ. of Posts and Telecommunications, Beijing, China, 2024.

[17] Weihong W, and Jiaoyang T, "Research on license plate recognition algorithms based on deep learning in complex environment," *IEEE Access*, vol.8, pp. 91661-91675, 2020.

[18] Y. Zou, Y. Zhang, and J. Yan, "A robust license plate recognition model based on bi-lstm," *IEEE Access*, vol.8, pp. 211630-211641, 2020.

[19] Süsstrunk S, Buckley R, and Swen S, "Standard RGB color spaces," in *Proc. IS&T;/SID 7th Color Imaging Conference*, 1999, vol.7, pp. 127-134.

[20] Sural S, Qian G, and Pramanik S, "Segmentation and histogram generation using the HSV color space for image retrieval," in *IEEE Proceedings. International Conference on Image Processing*, 2002, vol.2, pp. II-II.

[21] F. Qi, X. Li, and G. Zhang, "RGB to HSV Conversion Based on FPGA," in *Frontier Computing: Proceedings of FC 2020*, Springer Singapore, 2021, pp. 705-711.

[22] Gupta A, Sinha A, and Poddar S, "Lesion Isolation from Apple Plant Leaves Affected by Black Rot Disease using Optimized Masking on Various Color Channels," in *IEEE 3rd International Conference on Issues and Challenges in Intelligent Computing Techniques (ICICT)*, 2022, pp. 1-5.

[23] Tao N, "Enhanced Canny Algorithm for Image Edge Detection in Print Quality Assessment," *Traitement du Original*, vol.40, no.3, 2023.

[24] Y. Hu, "Design and implementation of FPGA license plate image recognition," *Internet of Things Technology*, vol.13, no.10, pp. 29-32, 2023, DOI: 1 0.16667/j.issn.2095-1302.2023.10.008.

[25] J. Xie, Z. Chen, and J. Fu, "Research on license plate positioning system based on FPGA," *Electronics and Packaging*, vol.22, no.01, pp. 90-95, 2022.

Authorized licensed use limited to: Shenzhen Technology University. Downloaded on March 11,2026 at 14:18:41 UTC from IEEE Xplore. Restrictions apply.