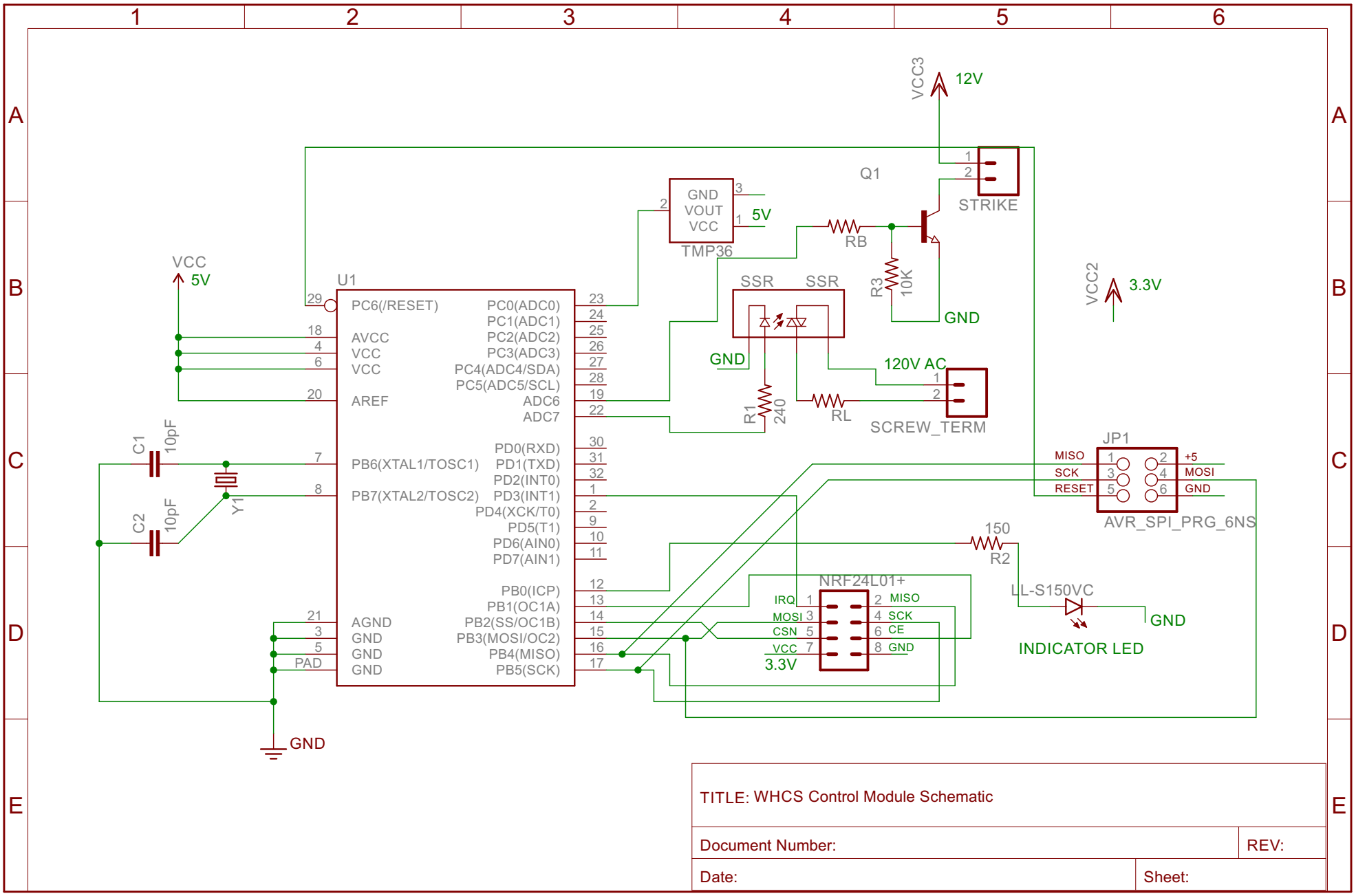

TITLE: WHCS Control Module Schematic

Document Number:

REV:

Date:

Sheet: