Parts List				
ITEM	QTY	PART NUMBER	DESCRIPTION	MATERIAL
1	1	Base	BASE	Stainless Steel
2	1	Base Tube	BASE TUBE	Stainless Steel
3	3	Gusset	GUSSET	Stainless Steel

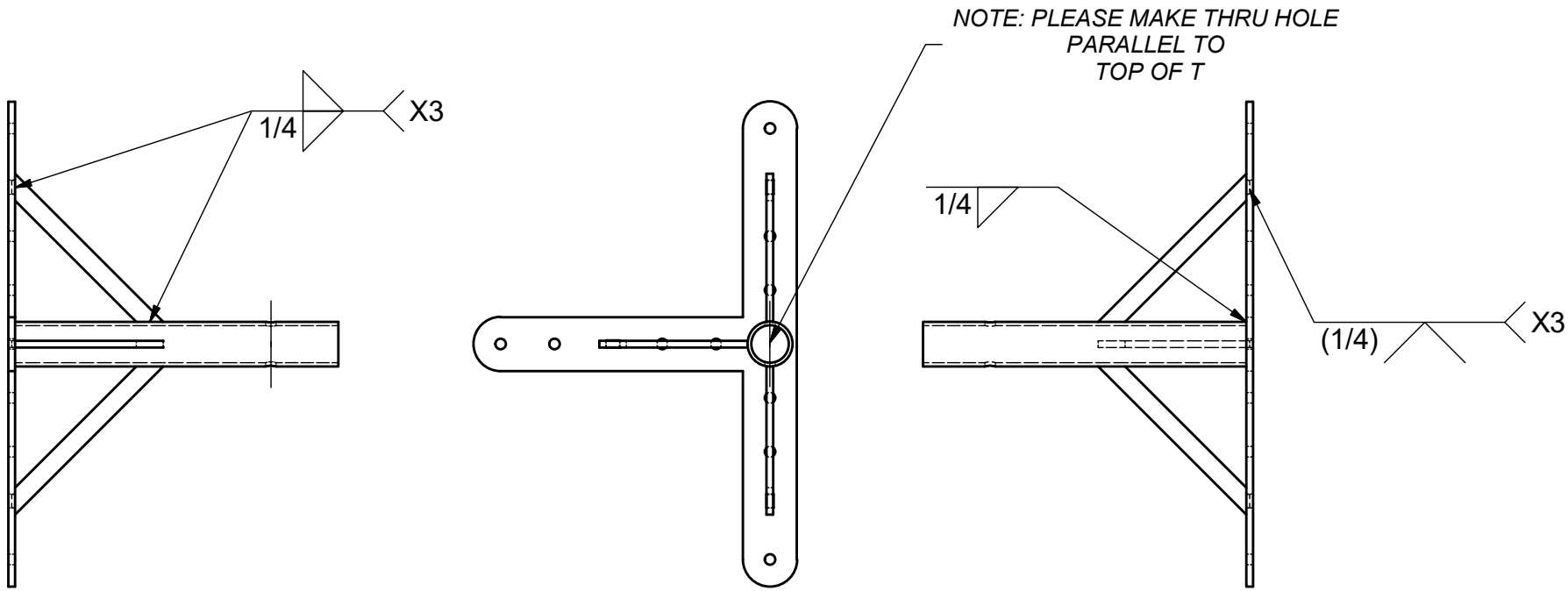

UNLESS OTHERWISE NOTED:
DIMENSIONS IN INCHES
TOLERANCES:

DECIMAL		ANGULAR
.xx	± 0.01	± 1 deg
.xxx	± 0.005	

BREAK ALL SHARP EDGES R0.02 MIN

MATERIAL

FINISH
SEE APPLICABLE NOTES

DESIGN *j Schwartz* DATE *4/6/2020*
DRAFT
CHECKED

WOODS HOLE OCEANOGRAPHIC INSTITUTION
APPLIED OCEAN PHYSICS & ENGINEERING
86 WATER STREET, WOODS HOLE, MA 02543

TITLE
PHYTO - ARM
BASE ASSEMBLY

SIZE A | DWG NO *Base Assembly* | REV

SCALE | SHEET 1 OF 1

Parts List				
ITEM	QTY	PART NUMBER	DESCRIPTION	MATERIAL
1	1	Top Plate	TOP PLATE	Stainless Steel
2	1	Top Tube	TOP TUBE	Stainless Steel
3	4	Top Gusset	TOP GUSSET	Stainless Steel
4	1	Top Stopper	TOP STOPPER	Stainless Steel

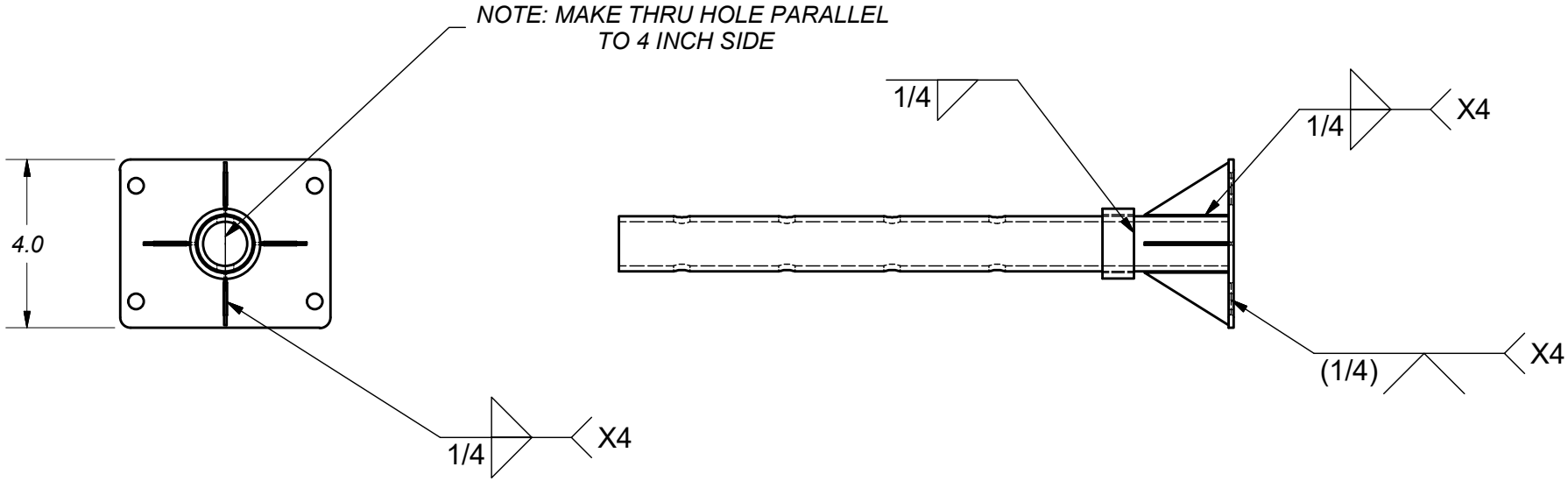

UNLESS OTHERWISE NOTED:
DIMENSIONS IN INCHES
TOLERANCES:

DECIMAL		ANGULAR
.xx	± 0.01	± 1 deg
.xxx	± 0.005	

BREAK ALL SHARP EDGES R0.02 MIN

MATERIAL

FINISH
SEE APPLICABLE NOTES

DESIGN	*JSchwartz*	DATE *4/6/2020*
DRAFT		
CHECKED		

WOODS HOLE OCEANOGRAPHIC INSTITUTION
APPLIED OCEAN PHYSICS & ENGINEERING
86 WATER STREET, WOODS HOLE, MA 02543

TITLE
PHYTO-ARM
TOP ASSEMBLY

SIZE A | DWG NO *Top Assembly* | REV

SCALE | SHEET 1 OF 1

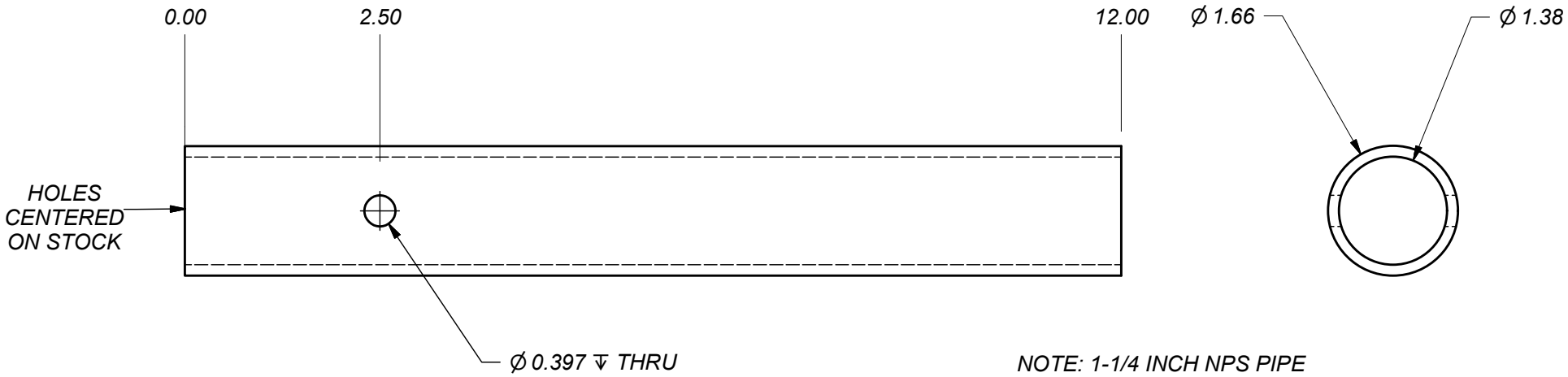

NOTE: 1-1/4 INCH NPS PIPE

UNLESS OTHERWISE NOTED:
DIMENSIONS IN INCHES
TOLERANCES:

DECIMAL		ANGULAR
.xx	± 0.01	± 1 deg
.xxx	± 0.005	

BREAK ALL SHARP EDGES R0.02 MIN

MATERIAL: *Stainless Steel*

FINISH: *SEE APPLICABLE NOTES*

DESIGN	*JSchwartz*	DATE *4/3/2020*
DRAFT		
CHECKED		

WOODS HOLE OCEANOGRAPHIC INSTITUTION
APPLIED OCEAN PHYSICS & ENGINEERING
86 WATER STREET, WOODS HOLE, MA 02543

TITLE

PHYTO-ARM

BASE TUBE

SIZE	DWG NO	REV
A	*Base Tube*	

SCALE | SHEET 1 OF 1

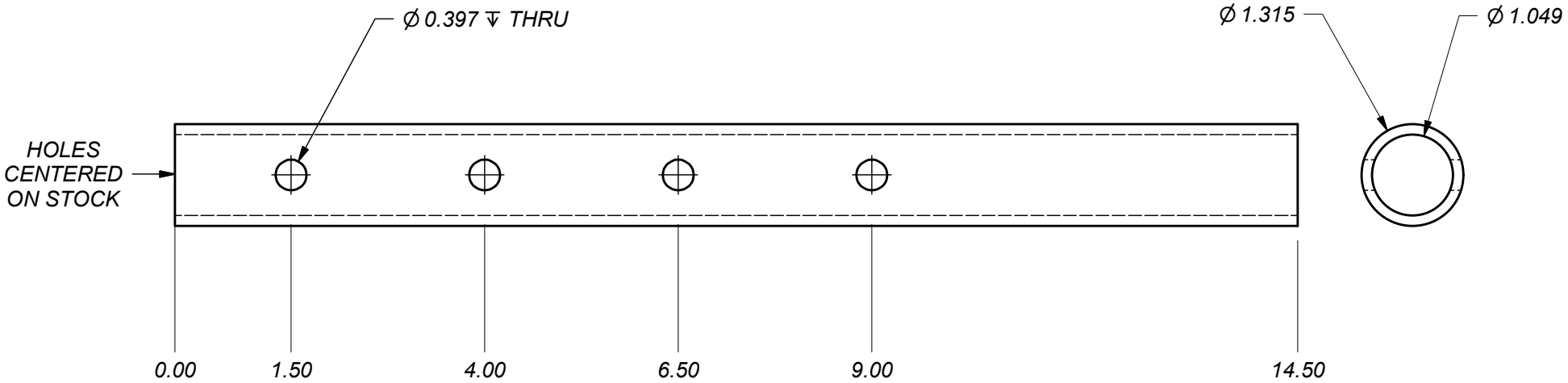

NOTE: 1 INCH NPS PIPE

UNLESS OTHERWISE NOTED:
DIMENSIONS IN INCHES
TOLERANCES:

DECIMAL		ANGULAR
.xx	± 0.01	± 1 deg
.xxx	± 0.005	

BREAK ALL SHARP EDGES R0.02 MIN

MATERIAL: *Stainless Steel*

FINISH: *SEE APPLICABLE NOTES*

DESIGN	*J Schwartz*	DATE *4/3/2020*
DRAFT		
CHECKED		

WOODS HOLE OCEANOGRAPHIC INSTITUTION
APPLIED OCEAN PHYSICS & ENGINEERING
86 WATER STREET, WOODS HOLE, MA 02543

TITLE
PHYTO-ARM
TOP TUBE

SIZE	DWG NO	REV
A	*Top Tube*	

SCALE | SHEET 1 OF 1

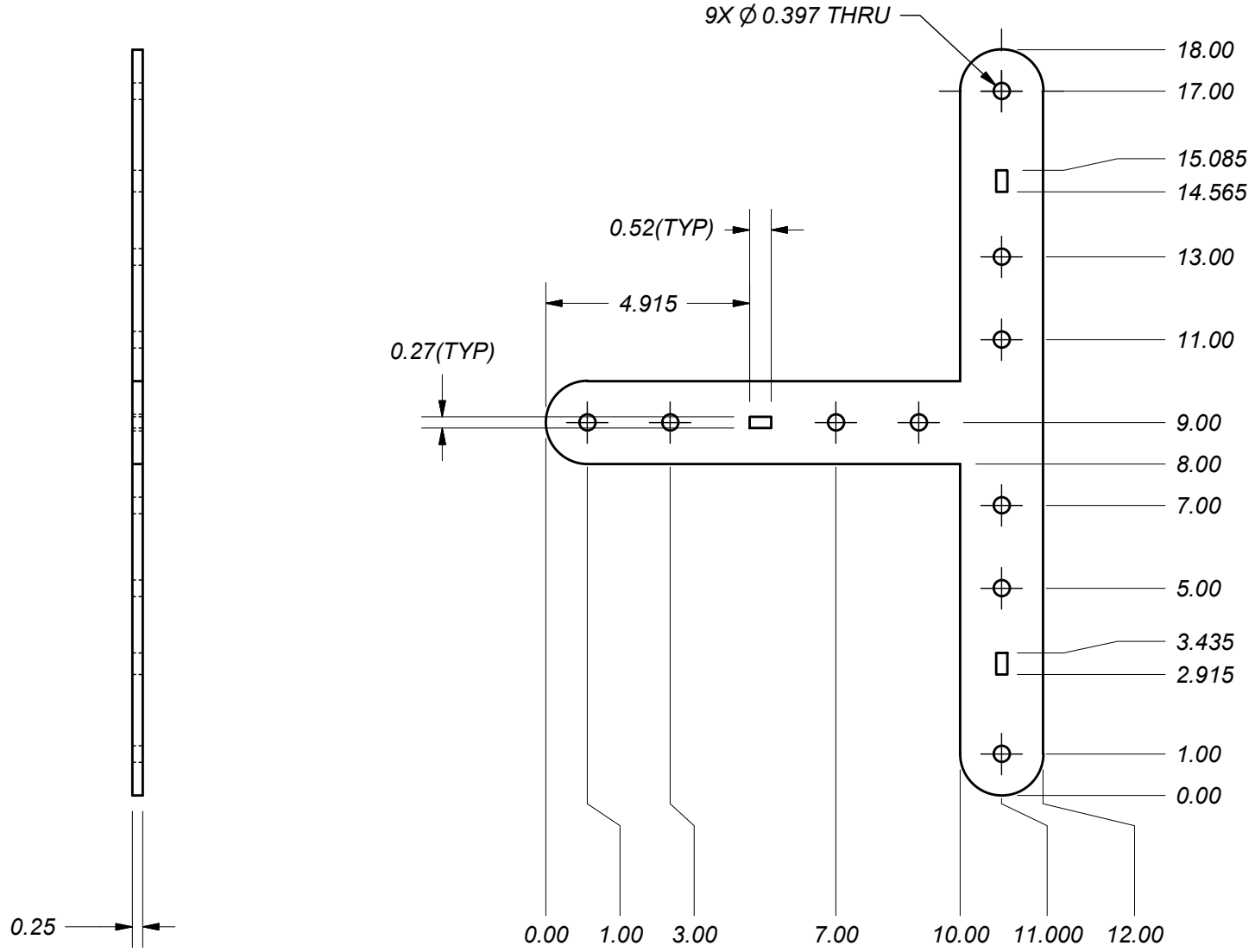

UNLESS OTHERWISE NOTED:
DIMENSIONS IN INCHES
TOLERANCES:

DECIMAL		ANGULAR
.xx	± 0.01	± 1 deg
.xxx	± 0.005	

BREAK ALL SHARP EDGES R0.02 MIN

MATERIAL: *Stainless Steel*

FINISH: *SEE APPLICABLE NOTES*

DESIGN	*JSchwartz*	DATE *4/3/2020*
DRAFT		
CHECKED		

WOODS HOLE OCEANOGRAPHIC INSTITUTION
APPLIED OCEAN PHYSICS & ENGINEERING
86 WATER STREET, WOODS HOLE, MA 02543

TITLE

PHYTO-ARM

BASE

SIZE	DWG NO	REV
A	*Base*	

SCALE | SHEET 1 OF 1

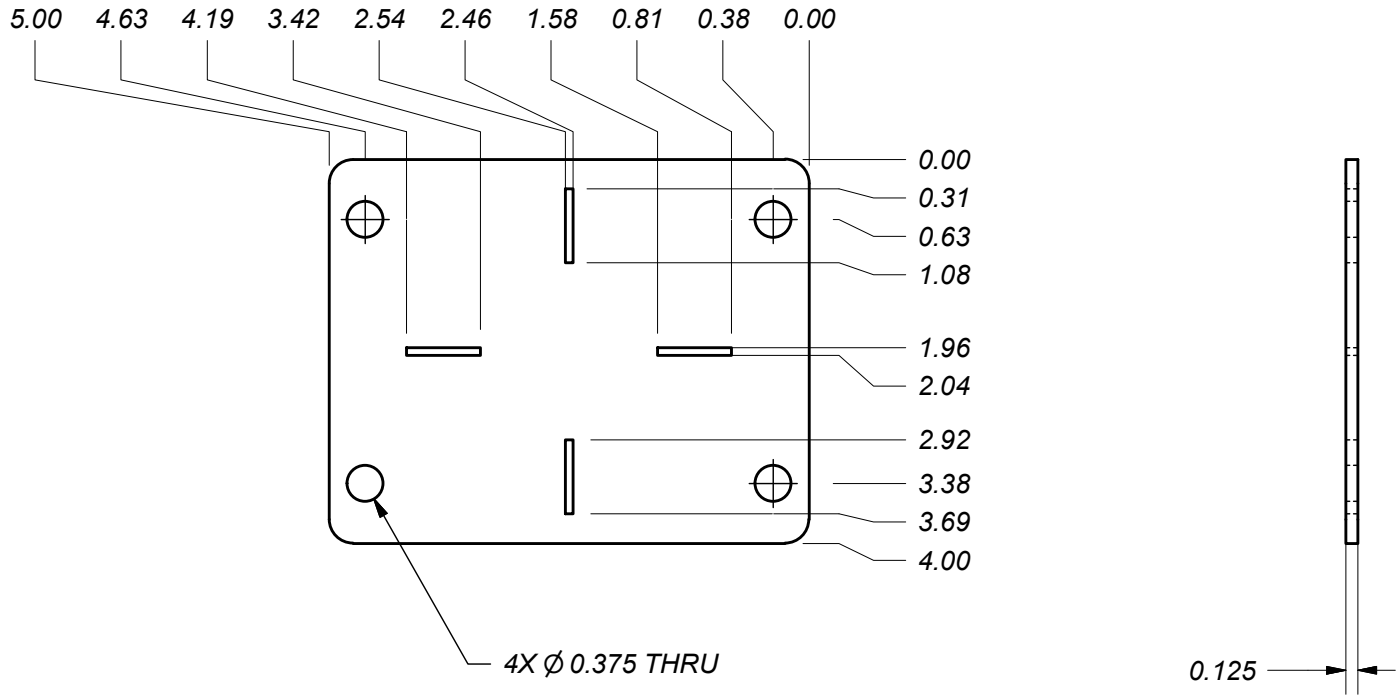

UNLESS OTHERWISE NOTED:
DIMENSIONS IN INCHES
TOLERANCES:

DECIMAL		ANGULAR
.xx	± 0.01	± 1 deg
.xxx	± 0.005	

BREAK ALL SHARP EDGES R0.02 MIN

MATERIAL: *Stainless Steel*

FINISH: *SEE APPLICABLE NOTES*

DESIGN	*Jschwartz*	DATE *4/3/2020*
DRAFT		
CHECKED		

WOODS HOLE OCEANOGRAPHIC INSTITUTION
APPLIED OCEAN PHYSICS & ENGINEERING
86 WATER STREET, WOODS HOLE, MA 02543

TITLE

PHYTO-ARM

TOP PLATE

SIZE	DWG NO	REV
A	*Top Plate*	

SCALE | SHEET 1 OF 1

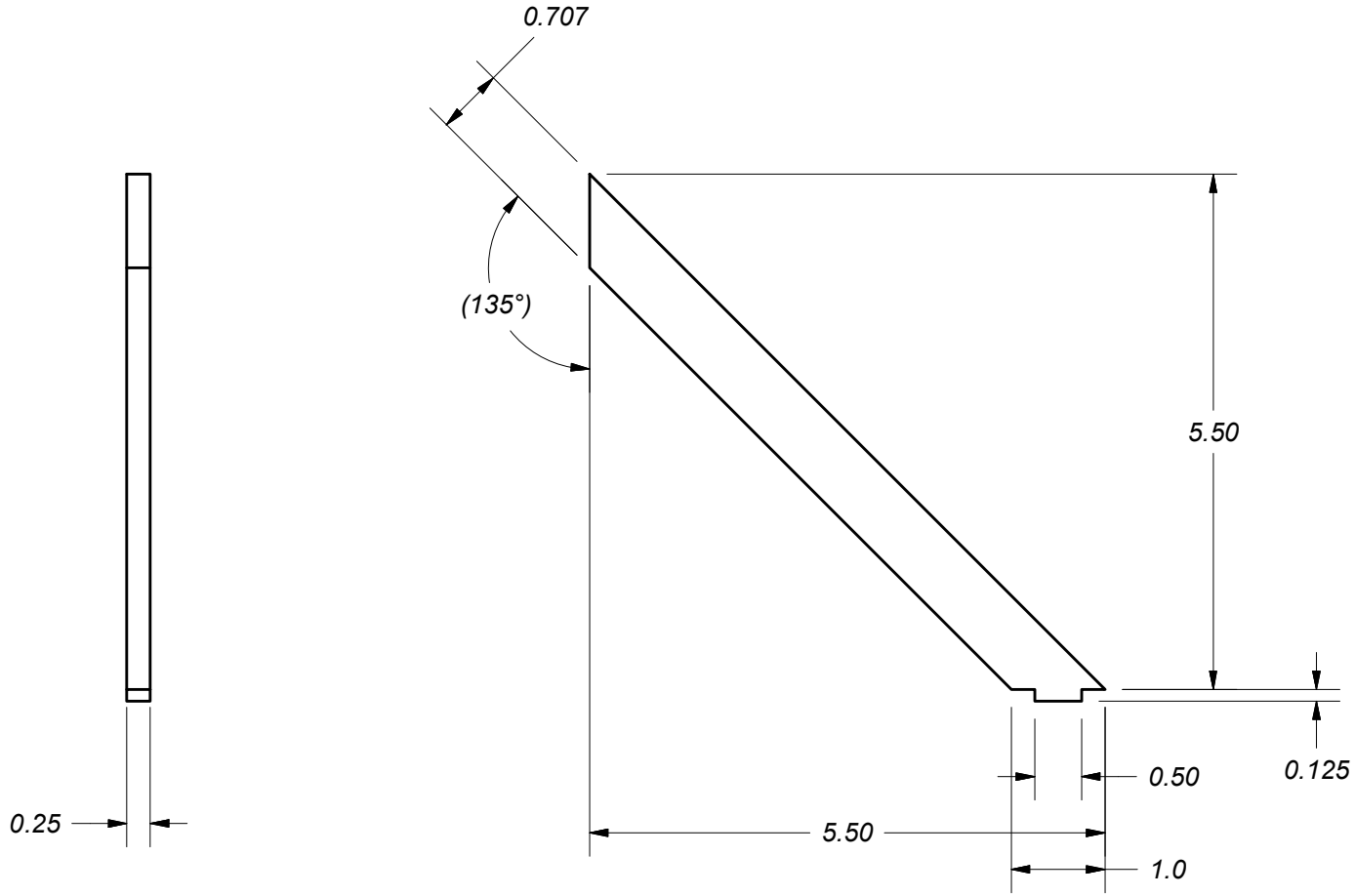

NOTE: QUANTITY 3 PER STAND

UNLESS OTHERWISE NOTED: DIMENSIONS IN INCHES TOLERANCES: DECIMAL: .xx ± 0.01, .xxx ± 0.005 ANGULAR: ± 1 deg BREAK ALL SHARP EDGES R0.02 MIN	DESIGN: JSchwart DRAFT CHECKED	DATE: 4/3/2020
MATERIAL: Stainless Steel		
FINISH: SEE APPLICABLE NOTES		

WOODS HOLE OCEANOGRAPHIC INSTITUTION
APPLIED OCEAN PHYSICS & ENGINEERING
86 WATER STREET, WOODS HOLE, MA 02543

TITLE
PHYTO-ARM
GUSSET

SIZE	DWG NO	REV
A	Gusset	

SCALE | SHEET 1 OF 1

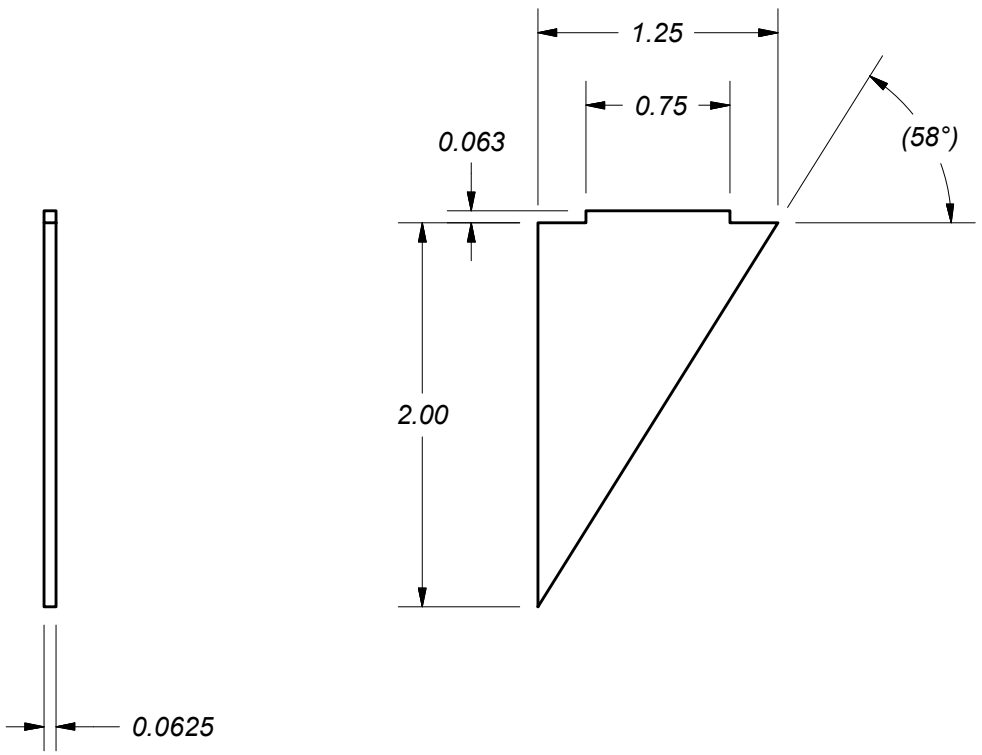

NOTE: QUANTITY 4 PER STAND

UNLESS OTHERWISE NOTED: DIMENSIONS IN INCHES TOLERANCES: DECIMAL .xx ± 0.01, .xxx ± 0.005 ANGULAR ± 1 deg BREAK ALL SHARP EDGES R0.02 MIN	DESIGN: JSchwartz DRAFT	DATE: 4/3/2020
MATERIAL: Stainless Steel	CHECKED	
FINISH: SEE APPLICABLE NOTES		

WOODS HOLE OCEANOGRAPHIC INSTITUTION
APPLIED OCEAN PHYSICS & ENGINEERING
86 WATER STREET, WOODS HOLE, MA 02543

TITLE
PHYTO-ARM
TOP GUSSET

SIZE	DWG NO	REV
A	Top Gusset	

SCALE | SHEET 1 OF 1

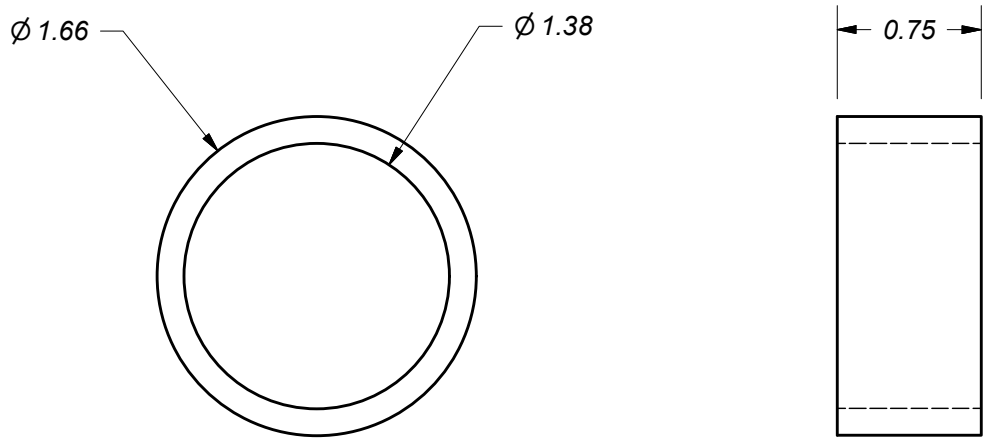

NOTE: 1-$\frac{1}{4}$ NPS PIPE

UNLESS OTHERWISE NOTED:
DIMENSIONS IN INCHES
TOLERANCES:

DECIMAL		ANGULAR
.xx	± 0.01	± 1 deg
.xxx	± 0.005	

BREAK ALL SHARP EDGES R0.02 MIN

MATERIAL: *Stainless Steel*

FINISH: *SEE APPLICABLE NOTES*

DESIGN	*JSchwartz*	DATE *4/3/2020*
DRAFT		
CHECKED		

WOODS HOLE OCEANOGRAPHIC INSTITUTION
APPLIED OCEAN PHYSICS & ENGINEERING
86 WATER STREET, WOODS HOLE, MA 02543

TITLE

PHYTO-ARM

TOP STOPPER

SIZE	DWG NO	REV
A	*Top Stopper*	

SCALE | SHEET 1 OF 1