WET Labs Inc.

620 Applegate St.
Philomath, OR 97370
Phone: 541-929-5650
Fax: 541-929-5277

REVISIONS

REV	DATE	DESCRIPTION	BY
1.1	02/08/02	ADDED RCA JACK AND TWO THROW SWITCH	SEM
1.2	1/3/2003	REMOVED "HOST/TERM" SWITCH	ARD

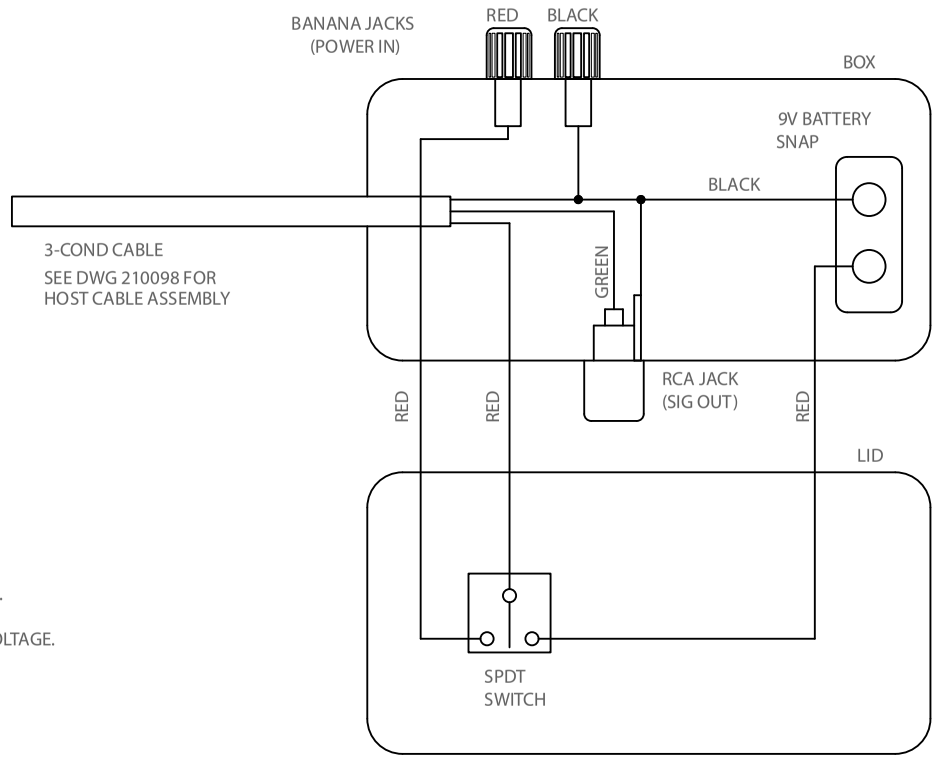

NOTES:
1. CONNECTED TO HOST CABLE.
2. AS SEEN FROM INSIDE OF BOX.
-
-

APPLICATIONS:
1. TURN POWER ON/OFF.
2. USE EXTERNAL POWER SOURCES.
3. MONITOR SIGNAL OUTPUT.
4. CHECK INSTRUMENT BATTERY VOLTAGE.

NOTES:
-
-
-

TOLERANCES:

X.X	+/- 0.05
X.XX	+/- 0.01
X.XXX/X.XXXX	+/- 0.005

WET LABS PROPRIETARY
THIS DOCUMENT CONTAINS CONFIDENTIAL, PROPRIETARY INFORMATION THAT IS PROPERTY OF WET LABS. DO NOT DISCLOSE TO OR DUPLICATE FOR OTHERS EXCEPT AS AUTHORIZED BY WET LABS.

HOST CABLE SWITCH BOX
ECO

SIZE	ENGR.	INV. NO.	DWG NO.	REV
A	S.E. MOLE	-	210097	1.2

SCALE	DATE (1.0)	SHEET
NONE	3/26/01	1 OF 1