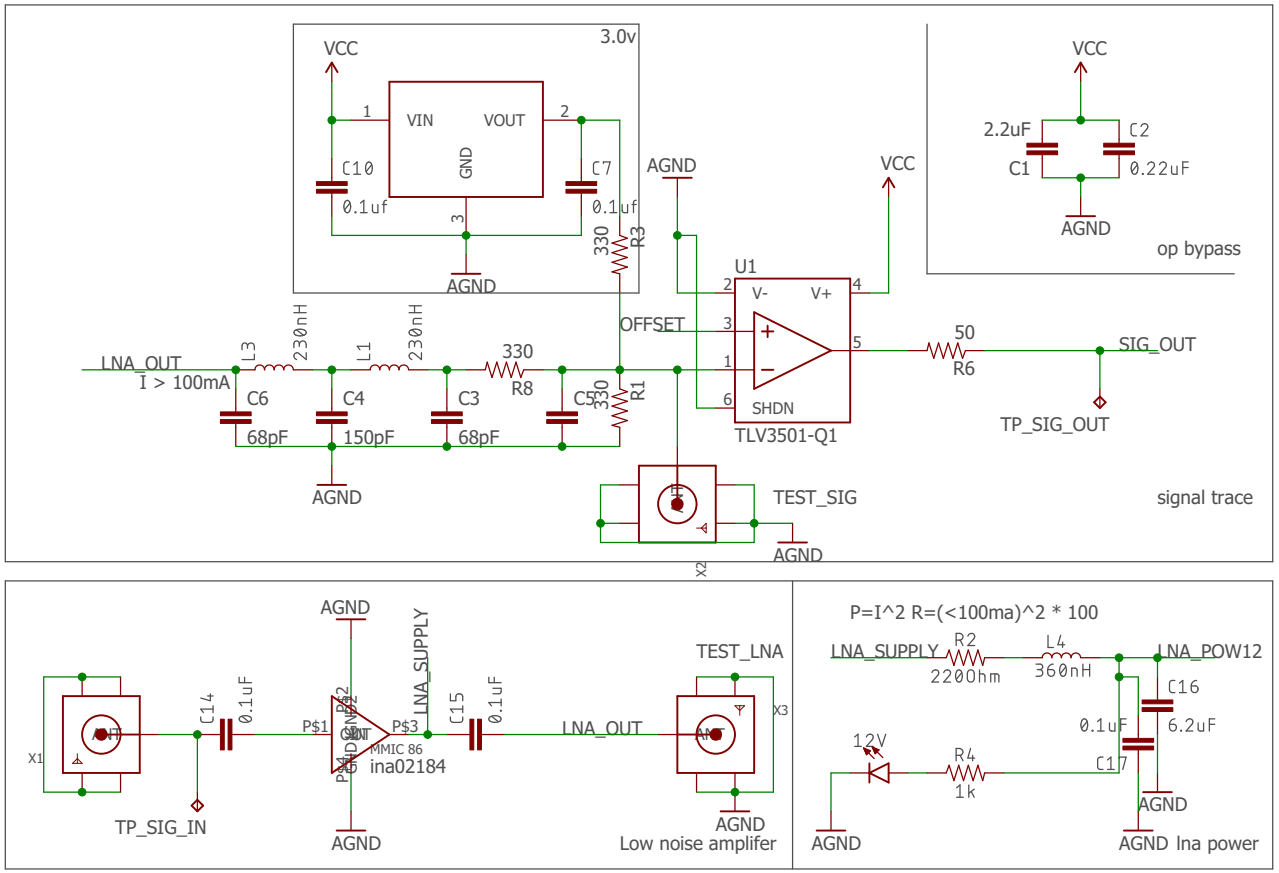

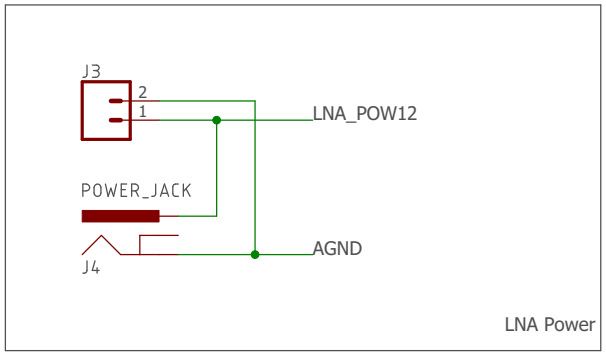

Thickness: 1.0mm

Er: 4.5

D1: 6mil

Coppor: 1oz (0.035mm)

Z0=50

W=0.7120

Arguments

Amplifer	
sampler	
12/13/2017 16:08	>DESIGNER
Sheet: 1/2	Rev: >CREVISION

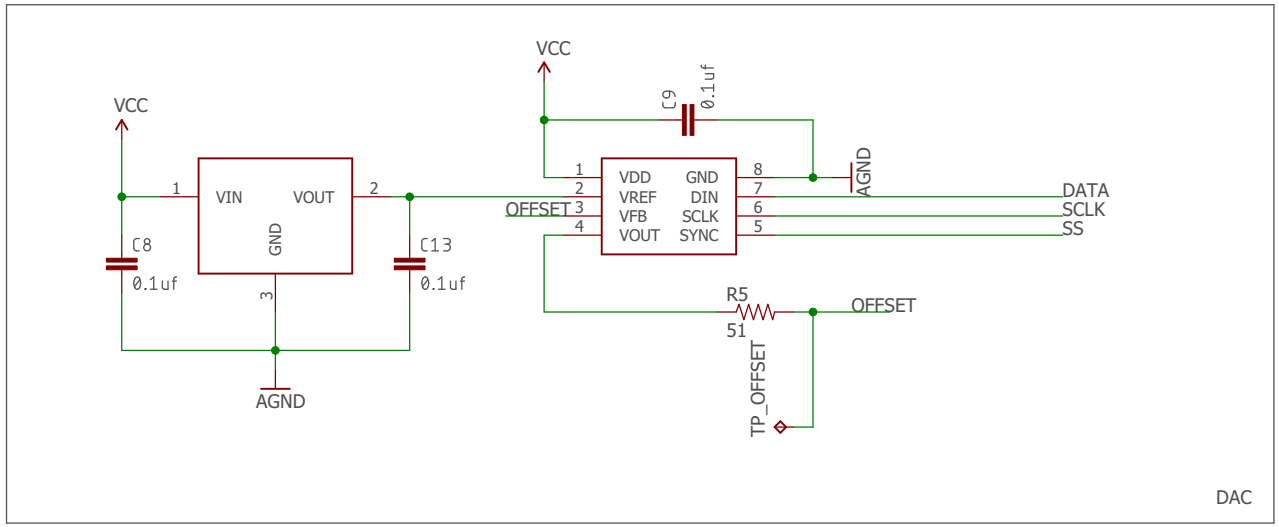

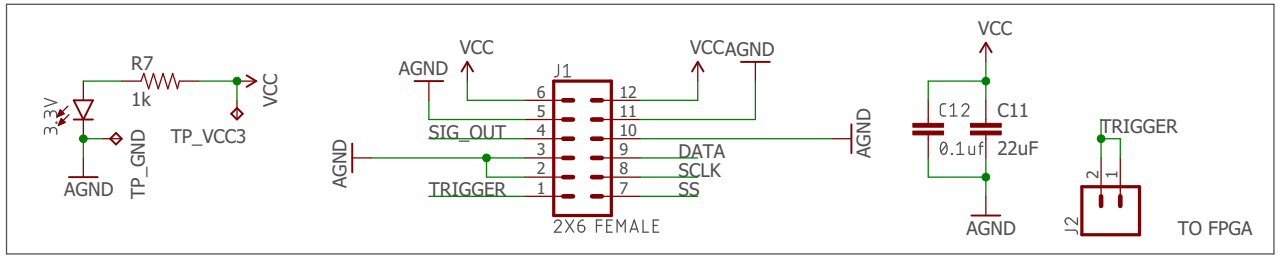

FPGA&DAC	
sampler	
12/13/2017 16:08	>DESIGNER
Sheet: 2/2	Rev: >CREVISION