Research on the Vulnerabilities of Radio Access Network under Cross-Layer Attack

Jingni Chen[†], Shan Wang[†], Chen Zhang[*], Quan Peng, Shi Hu and Jingyu Tang
College of Electronic Science and Technology
National University of Defense Technology
Changsha, Hunan, China
{chenjingni23, chinafir, zhangchen, pengquan21, hushi19, tangjingyu23} @nudt.edu.cn

2025 IEEE 102nd Vehicular Technology Conference (VTC2025-Fall) | 979-8-3315-0320-8/25/$31.00 ©2025 IEEE | DOI: 10.1109/VTC2025-Fall65116.2025.11310666

***Abstract*—Current research on the security of radio access networks (RAN) mainly focuses on constructing and analyzing attack models that target individual layers of the protocol stack. However, such attack methods often overlook the inherent vulnerabilities arising from interactions between different layers, which can be exploited to launch more effective attacks. We propose a novel control-plane cross-layer attack, called CLAS (Cross-Layer Attack System), which enables an attacker to use a single device to stealthily spoof the target user, interrupt its existing connection, and hijack it to a fake base station. This results in a covert and persistent Denial-of-Service (DoS) attack. Through experiments on commercial off-the-shelf (COTS) devices, we demonstrate that by collaboratively exploiting vulnerabilities across multiple protocol layers, the proposed CLAS only requires 4dB higher transmit power than a legitimate base station to achieve a 100% success rate. The attack effect can persist for up to 760.2 seconds, while simultaneously doubling the energy consumption rate of the victim device. This paper highlights critical security gaps in the current architecture of RAN, particularly in cross-layer protocol vulnerability management.**

Keywords—RAN, Cross-Layer Attack, Protocol Vulnerability, DoS

I. Introduction

With the advancement of mobile communication technologies such as 4G/5G, cellular networks have become a critical component of modern communication infrastructure. While they provide convenience to mobile users, they also expose them to various security threats, especially in radio access networks (RAN). These threats arise from the inherent openness and complexity of wireless links [1]. Since downlink broadcast channels between base stations and users transmit information in plaintext, attackers can easily eavesdrop on the messages [2] and manipulate their content to disrupt network availability [3]-[5]. Furthermore, attackers can exploit fake base stations and messages that lack integrity protection to deceive users, which could lead to Denial-of-Service (DoS) attacks [6]-[8] or result in privacy leakage [8], [9].

Existing attack methods primarily target specific protocol layers. At the physical-layer (PHY), attacks such as radio interference and control channel spoofing are commonly observed. At the data link layer, identity spoofing is used to hijack user connections [10], [11]. In the radio resource control (RRC) and non-access stratum (NAS) layers, attackers exploit vulnerabilities to launch persistent DoS attacks and cause privacy leakage [8], [12], [13], [14]. These attack methods generally require the continuous transmission of high-power signals to suppress legitimate communication links. Alternatively, they can only be effectively executed by manipulating critical parameters, such as the System Information Block (SIB), during the initial access procedure. Both approaches impose significant system overhead on the attacker. Moreover, detection tools for single-layer attacks have gradually matured, such as PHY spoofing signal detection based on SIB identifiers [15], [16], MAC layer anomaly detection based on traffic analysis [17], and NAS defense mechanisms based on signaling integrity verification [18].

To address these challenges, this paper proposes CLAS, a control-plane cross-layer collaborative attack method designed for RAN. This approach not only disconnects the user equipment (UE) from the legitimate base station (eNodeB in 4G), but also covertly redirects the UE to a fake eNodeB using cross-layer collaboration techniques. The mentioned cross-layer attack can also be applied to 5G and other cellular networks. This enables stealthy hijacking and facilitates subsequent attacks.

The core advantage of the CLAS attack lies in its ability to collaborate across layers and maintain concealment. Specifically, it exploits the inherent response mechanisms within the protocol to disconnect the UE and trigger its cell re-selection, thereby covertly implementing high-layer signaling injection attacks. By exploiting vulnerabilities across different protocol layers, the attacker can achieve full-link control from the radio link to the core network. Additionally, we improve the single-layer attack, which can evade certain single-layer defense mechanisms, enhance the concealment of the attack, and extend the attack lifecycle. Finally, we validate CLAS's effectiveness for attacking commercial off-the-shelf (COTS). Our contributions can be summarized as follows:

- Improvement of the PHY downlink frame spoofing attack: Instead of using high-power signals for forced suppression, we utilize the protocol's default handling mechanism when the UE is unable to acquire SIB1. We propose a lightweight frame construction to enhance the concealment of the PHY downlink frame spoofing attack.
- Cross-layer attack design: Through the signal spoofing at the PHY layer, the UE can be forced to covertly directed to the fake eNodeB, which is injected with a NAS reject signaling with a specified error cause. This allows attackers to stealthily hijack the UE and enable persistent DoS attacks.
- Testbed verification: We built a real cellular network environment using software defined radio (SDR) tools and validated the effectiveness of the CLAS attack on COTS devices.

The structure of the rest of this paper is as follows. Section II discusses the essential background knowledge (include potential vulnerabilities) required to understand the CLAS attack. Section III presents the framework and implementation details of the proposed CLAS attack. In Section IV, we

[†] These authors contributed to the work equally and should be regarded as co-first authors.

[*] Corresponding author: Chen Zhang

979-8-3315-0320-8/25/$31.00 ©2025 IEEE
Authorized licensed use limited to: UNIV OF HAWAII LIBRARY. Downloaded on February 11,2026 at 12:22:43 UTC from IEEE Xplore. Restrictions apply.

conduct testing and analysis to validate its effectiveness. Finally, we provide a conclusion in Section V.

II. Background

A. System Information

The base station periodically broadcasts downlink signals to provide essential information for UE to access the network. Among this information, system information is the most important element. System information includes the Master Information Block (MIB) and the SIB. The MIB carries fundamental cell access parameters such as bandwidth and system frame number, while SIBs carry critical information such as the Public Land Mobile Network (PLMN) list, Tracking Area Code (TAC) and cell status (e.g., *cell-Barred*).

PLMN represents the network to which the SIM card is bound when activated, typically consisting of the Mobile Country Code (MCC) and the Mobile Network Code (MNC). The MCC identifies the country or region, while the MNC specifies the operator within that country or region. If a PLMN is added to the PLMN disabled list, the UE will refuse to connect to any eNodeB with the same PLMN values. The TAC is used to identify the Tracking Area (TA) where the UE is located, and it is the basic unit for UE location management in 4G/5G networks. If the UE decodes the SIB and finds that the cell status contains access restriction information, such as the message field *cell-barred*, the UE will treat this cell as barred, refrain from connecting to that eNodeB, and initiate a new cell search.

B. Procedure

When a UE initially access to a network, it follows the procedure shown in Fig. 1. The cellular network consists of three components: UE, eNodeB and the core network. Among the core network components, the most relevant to this work is the Mobility Management Entity (MME), which is responsible for managing the attachment procedure. The following sections will introduce the cell selection procedure and the Tracking Area Update (TAU) procedure.

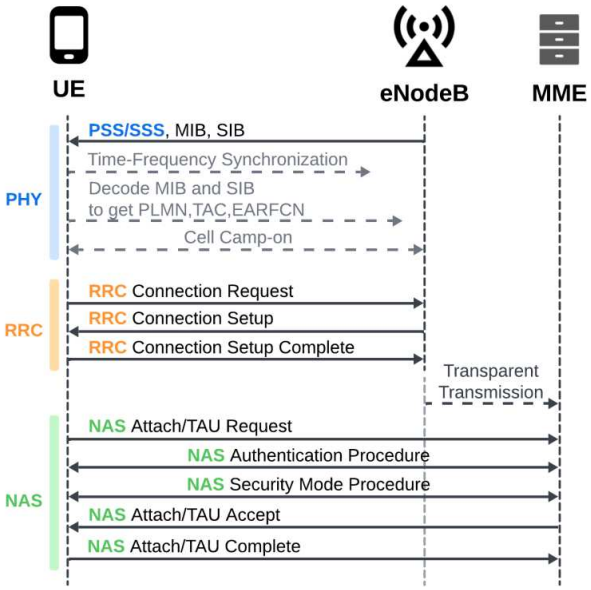

Fig. 1. The procedure of cell selection and initial access to the network.

1) Cell Selection Procedure

When the UE is powered on or enters the IDLE state, it triggers the cell selection procedure to identify a suitable cell for camped operation. To select a cell, the NAS layer first chooses a PLMN and scans the available frequency bands within its permitted range. The UE then performs time-frequency synchronization with the strongest signal in the scanned bands and decodes the Physical Cell Identity (PCI).

Synchronization signals consist of the Primary Synchronization Signal (PSS) and the Secondary Synchronization Signal (SSS). By combining the PSS and SSS, a unique PCI can be determined. Therefore, if an attacker transmits the same PSS and SSS sequences as those of a legitimate eNodeB, the UE will decode the same PCI and mistakenly identify the attacker's signal as belonging to the same cell and eNodeB.

After synchronization, the UE decodes the MIB to determine the frame structure and system bandwidth, and then obtains access restriction information through SIBs. UE measures the Reference Signal Received Power (RSRP) and the Reference Signal Received Quality (RSRQ), filtering candidate cells that meet the threshold conditions (RSRP > -110 dBm and RSRQ > -10 dB) and are not prohibited. Candidate cells are then sorted based on frequency band priority and signal strength, and UE will select the best cell to camp on.

2) TAU procedure

TAU is a core procedure initiated by the UE in 4G/5G networks, designed to update the UE's location information to the MME. This ensures efficient paging of UEs in IDLE state. When the UE detects a change in its current TA, it triggers the TAU procedure, as shown in Fig. 1. Upon receiving the *TAU Request* from the UE, the MME responds with NAS signaling (such as *TAU Accept* or *TAU Reject*) following the security mode procedure. The response depends on the network status and the information provided by the UE. The NAS reject signaling includes an error cause value, which informs the UE of the reason for the rejection. The UE will then react differently based on the various error cause values [19].

Notably, all signaling is unencrypted and lacks integrity protection before the UE establishes a security mode with the core network. This leaves UE unable to verify whether the signaling comes from a legitimate eNodeB. As a result, attackers can exploit this vulnerability to launch a fake base station attack by spoofing relevant control-plane information to the UE.

III. CLAS Attack Model

Previous PHY downlink frame spoofing attacks, as described in [3] and [4], achieve their purposes by modifying specific message fields in SIBs. To maintain a persistent attack effect, these attacks rely on continuously forged high-power signals, which have the drawbacks of being high-cost and easily detectable by detection mechanisms based on SIB signatures [15]. Therefore, considering the layered structure of the RAN protocol stack, we propose CLAS, a cross-layer collaborative attack. By injecting signaling at the subsequent NAS layer, the attack can extend its impact from the PHY layer, allowing the attacker to avoid the need for continuous transmission of spoofing signals. However, NAS signaling injection attacks require the fake eNodeB to first attract the UE before it can inject the forged signaling. Therefore, to implement CLAS, we must address the following key issues: How to obtain parameters of the legitimate eNodeB? How to stealthily disconnect the UE's existing connection? How to effectively coordinate attacks across the PHY and NAS layers?

Compared to single-layer attacks, CLAS can link vulnerabilities from different protocol layers. It addresses the

Authorized licensed use limited to: UNIV OF HAWAII LIBRARY. Downloaded on February 11,2026 at 12:22:43 UTC from IEEE Xplore. Restrictions apply.

challenges of insufficient concealment and high-cost in PHY spoofing by utilizing NAS signaling injection. Additionally, it allows the attacker to hijack UE more covertly through PHY signal attacks in high-layer fake base station attacks.

We divide the attack procedure of CLAS into two stages: *A. PHY Downlink Frame Spoofing* and *B. NAS TAU Reject Signaling Injection*. The following sections will provide a detailed description of each stage and address the questions raised earlier. Fig. 2 overviews the CLAS attack model.

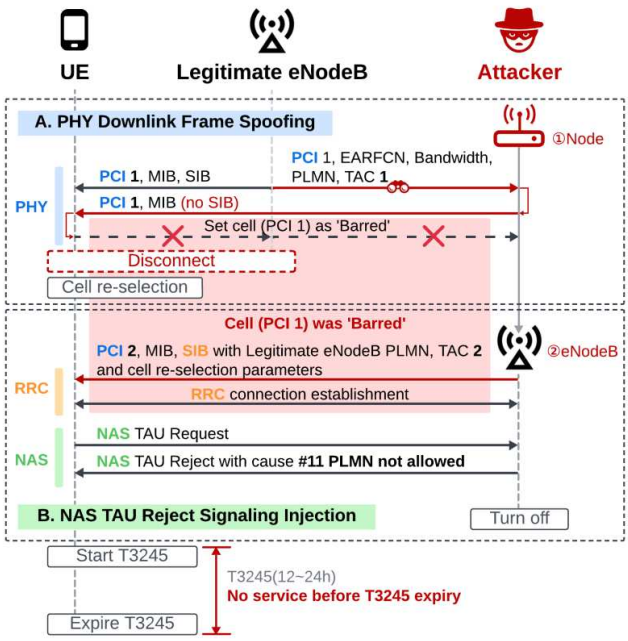

Fig. 2. Overview of the CLAS attack model.

A. PHY Downlink Frame Spoofing

How to obtain parameters of the legitimate eNodeB? As described in Section II, the eNodeB periodically broadcasts important parameters required for access. According to the 3rd Generation Partnership Project (3GPP) protocol specifications, PHY layer broadcast messages are transmitted in plaintext. Thus, the attacker can eavesdrop on the messages broadcast from a legitimate eNodeB as a fake user to obtain its fundamental parameters.

How to stealthily disconnect the UE's existing connection? When the UE is not engaged in data transmission with the connected network, it enters the IDLE state. In this state, the UE can periodically detect broadcast information and synchronize with the cell offering a stronger signal [20]. Therefore, the transmission power of the attacking signal only needs to be as powerful as the legitimate eNodeB to have a high probability of synchronizing the UE with the fake cell. According to the protocol specification, when the UE successfully decodes the synchronization signal, but fails to obtain the MIB or SIB1, it will mark the cell corresponding to the synchronized PCI as being in a *cell-barred* state [20]. Subsequently, the UE will perform a cell re-selection, and it may take up to 300 seconds before the UE lifts the barred status of the original cell and attempts to re-access the network [19]. Consequently, we directly simplify the structure of downlink frame by removing the SIB portion while reusing the legitimate eNodeB's PCI. This ensures that the UE cannot identify the fake cell based on PCI differences, thereby deceiving the UE into treating the legitimate eNodeB cell as barred according to the protocol specification.

As illustrated in Fig. 2, to implement the adaptive attack, it is necessary to first sniff the downlink of the legitimate eNodeB before spoofing the downlink frame. This involves decoding parameters such as PCI, frequency, bandwidth, PLMN, and TAC from the broadcast channel, which are required for configuring the subsequent stages of CLAS attack.

After successfully sniffing the configuration parameters of the legitimate eNodeB, the attacker transmits a downlink frame with the same PCI as the legitimate eNodeB, but with a slightly higher transmission gain on the same frequency band. Once the UE synchronizes with the fake cell, it will trigger the exception handling defined in the protocol specification due to the inability to decode the SIB1. This results in the current cell (including the legitimate eNodeB) corresponding to the PCI to be treated as barred, initiating a cell re-selection procedure. If no other suitable cells are detected at this time, the UE could still suffer a DoS attack lasting up to 300 seconds, even if the attacking node stops transmitting. This improved PHY downlink frame spoofing eliminates the need for continuous transmission of high-power forged signals, significantly reducing the attacker's power consumption and exposure risk.

B. NAS TAU Reject Signaling Injection

Before this stage of the attack, it is necessary to modify part of the source code of the fake eNodeB and inject the *TAU Reject* signaling with a specified error cause. As shown in TABLE I. , the UE responds differently based on different cause values.

TABLE I. ERROR CAUSE VALUES IN NAS MOBILITY MANAGEMENT PROTOCOL IN 4G LTE [19]

Cause value	Error cause
#03	Illegitimate UE
#07	EPS services not allowed
#08	EPS services and non-EPS services not allowed
#11	**PLMN not allowed**
#12	Tracking area not allowed
#14	EPS services not allowed in this PLMN
#22	Congestion

Since we are utilizing the *TAU Reject* signaling, the fake eNodeB needs to configure a different TAC from the legitimate eNodeB to trigger the TAU procedure on UE. Thus, the error cause value #12 related to TA has little impact when UE reconnects to the legitimate eNodeB. Based on the test results in Section IV, we finally selected cause value **#11 PLMN not allowed** as an important parameter for the second stage of the CLAS attack. Once the attacker's evolved packet core (EPC) receives the *TAU Request* from the UE, the fake eNodeB will return the *TAU Reject* signaling with cause #11. As a result, the UE will add the PLMN of the currently connected network to the disable list and actively disconnect from the network.

How to effectively coordinate attacks across the PHY and NAS layers? As shown in Fig. 2, during the time when the legitimate eNodeB is barred from accessing due to the previous PHY layer attack, the attacker can activate a differentiated fake eNodeB configured with parameters like PLMN and TAC, which have the highest reselection priority. This allows the attacker to stealthily hijack while triggering

Authorized licensed use limited to: UNIV OF HAWAII LIBRARY. Downloaded on February 11,2026 at 12:22:43 UTC from IEEE Xplore. Restrictions apply.

the UE's TAU procedure, thus completing the injection of high-level signaling.

When the fake eNodeB is activated, due to its highest cell reselection priority and the fact that the original legitimate eNodeB is still in the *cell-barred* state, the attacker does not need high power to lure the UE to the fake eNodeB, achieving stealthy hijacking. Upon receiving the system message from the fake eNodeB, which contains a different TAC from the previous one, the UE will initiate a *TAU Request* to the core network. The fake eNodeB then returns a *TAU Reject* message with cause **#11 PLMN not allowed**, forcing the UE to enter an out-of-service state for all base stations corresponding to the current PLMN value. Since the PLMN of the fake eNodeB is the same as the legitimate eNodeB, the UE cannot reconnect to the legitimate eNodeB either. At the same time, the UE will start the timer T3245 (12-24 hours) [9], and service can only be restored after the timer expires or by re-inserting the SIM card.

In summary, the core of the CLAS attack model lies in exploiting protocol vulnerabilities and cross-layer cooperation, with the following advantages:

- Concealment: During the PHY downlink frame spoofing attack, it is sufficient to briefly transmit forged signals to shut down the node, and the forged signals do not contain SIB messages, which can evade the detection based on SIB signature. Additionally, we do not need to use a high-power fake eNodeB to lure the UE, which enables stealthy hijacking.
- Persistence: By continuing to exploit NAS layer signaling attacks after initiating PHY signal attacks, the overall persistence of the attack can be significantly extended while remaining covert.
- Low-Cost: The attacker only requires one desktop and one SDR tool to execute the CLAS attack, without the need to continuously transmit high-power signals, significantly reducing overhead. In theory, a persistent DoS attack can be launched simultaneously against multiple users within the signal transmission range.

IV. Real World Experiment

This section presents the test platform setup required to implement the CLAS attack, along with test and analysis of the results on real air interface signals.

A. Experiment Setup

We built a real LTE communication platform and verified the effectiveness of the CLAS attack on COTS devices. Fig. 3 shows the established testbed, with the specific experimental setup as follows:

Legitimate eNodeB. We use a desktop (Intel Core i7-14700, 32GB RAM), connected to an SDR device (USRP B210) to transmit and receive air interface signals, and run the open-source software srsRAN[1] on the Ubuntu 20.04 LTS operating system to implement the 4G LTE network protocol stack.

Attacker. We use another of the same desktop and USRP B210 to take turns running the attack node and the fake eNodeB.

UE. Two commercial off-the-shelf devices (Redmi K40 and Maimang 20) are used as test victim UEs. Both devices are equipped with test SIM cards and are intended to connect to the legitimate eNodeB under normal conditions.

[1] https://github.com/srsran/srsRAN_4G

The eNodeB is configured to operate in Frequency Division Duplex (FDD) mode in Band 1. Specifically, the downlink frequency for all test cases is 2.12 GHz (EARFCN 100), with a signal bandwidth of 10 MHz .

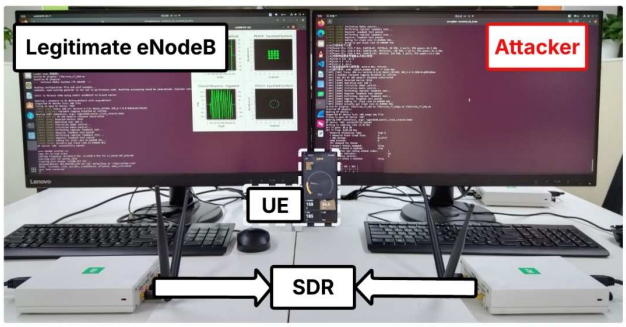

Fig. 3. Testbed for CLAS attack testing.

B. Experiment Testing

Assumption: During all attack tests, the legitimate eNodeB and UE always remain in normal operating condition, and the distance between the UE, legitimate eNodeB, and the attacker is the same.

1) PHY Downlink Frame Spoofing

First, implement the first stage of CLAS to verify the effect of the PHY downlink frame spoofing attack. Run our PHY attack script to eavesdrop on the downlink broadcast channel of the legitimate eNodeB. Then, use the same PCI to transmit forged downlink frame signals excluding the SIB.

Fig. 4 shows the UI when COTS devices are out of service, they show no connection to any cell and have no signal. This observation serves as the basis for determining whether the attack was successful.

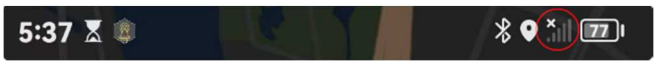

Fig. 4. COTS in an out-of-service state.

a) ***Findings***. We sent attack signals with different transmission gains, each close to the legitimate eNodeB. We tested each gain 50 times and got the attack success rate shown in TABLE II. .

TABLE II. Success Rate of PHY Downlink Fframe Spoofing

Tx gain(dB)	Legal eNodeB	70	70	70	70	70
	Attacker	70	72	74	76	78
Success rate(%)		83.3	91.7	100	100	100

When the transmission gain of the attack node is the same as that of the legitimate eNodeB, the attack success rate can reach 83.3% and the attack node only needs to be 4 dB higher than the legitimate eNodeB to achieve a 100% success rate. Therefore, we conducted the first stage of the CLAS spoofing attack with a relative power of 4 dB . The changes in cell RSRP measured on the UE side are shown in Fig. 5.

When the difference of RSRP between the fake cell and the legitimate cell is 13 dB, there is a 90% probability of a successful attack [22]. Fig. 5 shows that after the attacker starts transmitting the forged signal with the same PCI, the UE synchronized with the higher-power fake cell after 1 second. As a result, the RSRP value of the cell increased sharply.

Authorized licensed use limited to: UNIV OF HAWAII LIBRARY. Downloaded on February 11,2026 at 12:22:43 UTC from IEEE Xplore. Restrictions apply.

However, since the forged downlink frame did not contain SIBs, the UE treated the cell as barred. Consequently, the connection was disconnected after 3~7 seconds.

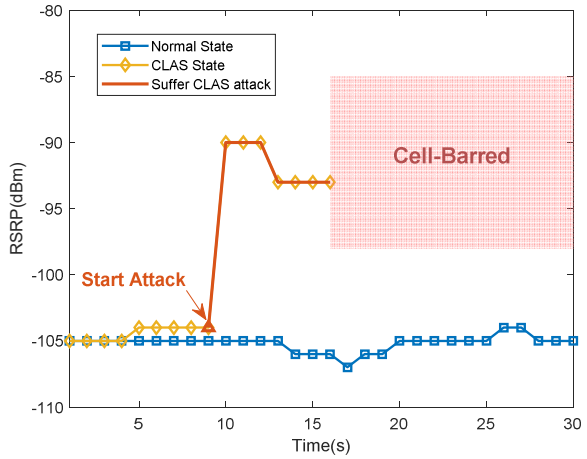

Fig. 5. Impact of the RSRP on the UE side when suffering CLAS attack.

2) NAS TAU Reject Signaling Injection

As shown in Fig. 5, after the attack node is activated, it takes about 3~7 seconds for the UE to mark the cell (PCI 1) as *cell-barred* and begin the cell re-selection procedure. Therefore, we turn off the attack node after starting the CLAS for 7 seconds, and at the same time use the time interval when the UE refuses to access the legitimate cell to configure and enable the fake eNodeB. Additionally, the control information from the fake eNodeB is used to lure the UE and trigger its TAU procedure. By modifying the source code of the fake eNodeB in advance, we inject a *TAU Reject* signaling with a specified cause value to achieve a more persistent DoS attack.

a) ***Findings***. After the core network received the *TAU Request* from the UE, it returned a pre-injected *TAU Reject* signaling with the cause **#11 PLMN not allowed**. The output from the EPC side is shown in Fig. 6.

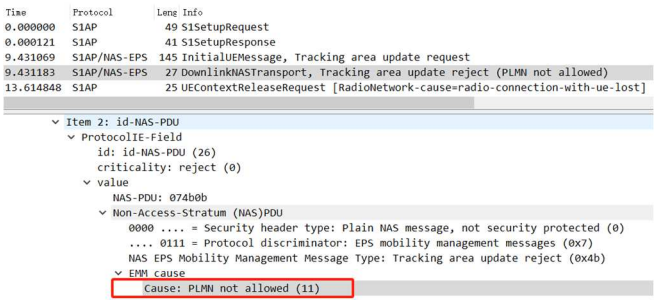

Fig. 6. Inject the *TAU Reject* signaling with cause value #11 from EPC.

Prior to this, we also attempted to inject other cause values. For instance, when using cause value **#8 EPS and non-EPS services not allowed** (rejecting all services), as in [8]. After receiving this signaling, UE 1 only lost connection for about 2 seconds, while UE 2 also just disconnected for no more than 10 seconds. Moreover, UE 1 would reconnect to the fake eNodeB (which has a higher reselection priority), while UE 2 would deny access to the fake eNodeB. Based on the test results above, we believe this is related to the settings of the mobile phone manufacturer. UE 1 does not have any corresponding reaction mechanism for this cause, while the mechanism in UE 2 simply adds this TA value to the disabled list, rather than rejecting all services on the device itself. To further investigate, we tested a total of 7 different cause values.

Fig. 7 illustrates the time it takes for the COTS to restore normal network services in all cases from TABLE I. , along with the average time required for each cause value.

By comparing the average values of multiple test results, it is observed that the NAS signaling attack with cause **#11 PLMN not allowed** has the most significant effect, causing the UE to remain in an out-of-service state for up to about 761.2 seconds. Therefore, we finally chose to inject the *TAU Reject* signaling with cause #11 in the second stage of the CLAS attack. However, due to differences in the T3245 timer settings across manufacturers, the UE did not experience a DoS attack as long as described in the protocol.

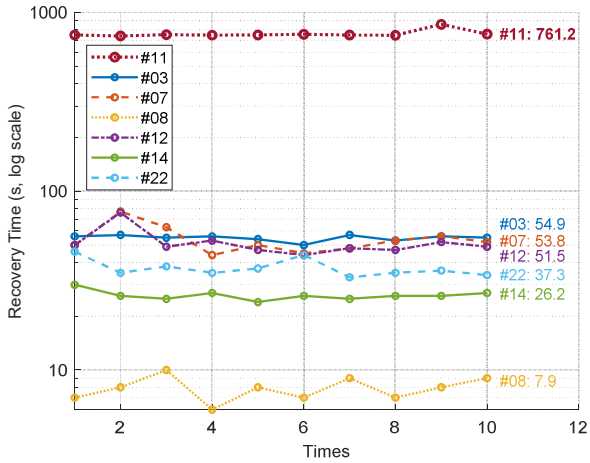

Fig. 7. Service recoverty time of COTS under attacks with different cause values.

After being attacked by a CLAS attack, the UE frequently performs PLMN searches and reselection attempts to re-access the network while in an out-of-service state, which may accelerate the energy consumption of UE. We measured the impact of the CLAS attack on COTS energy consumption. According to Fig. 8, the UE's energy consumption during a CLAS attack is more than twice that of normal condition, indicating a significant increase in the victim's energy consumption rate.

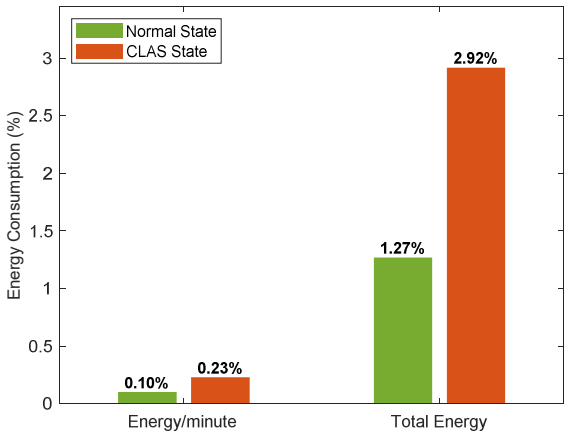

Fig. 8. Comparison of COTS's energy consumption before and after the CLAS attack

V. Conclusion

This paper designs a control-plane cross-layer attack for RAN, called CLAS. Compared to single-layer attacks under

Authorized licensed use limited to: UNIV OF HAWAII LIBRARY. Downloaded on February 11,2026 at 12:22:43 UTC from IEEE Xplore. Restrictions apply.

the same conditions, CLAS achieves a more covert and persistent DoS attack with fewer limitations. Specifically, we improved the existing PHY spoofing attack to reduce the risk of attackers being detected. Furthermore, we linked the vulnerabilities of PHY and NAS layers. Experimental results demonstrate that the attacker only needs a single device to perform a full-link DoS attack from the signal to the signaling, significantly reducing the attacker's cost. Unlike other stealthy attacks, CLAS still performs well even after the UE has already accessed the network. The CLAS attack reveals potential security risks in the air interface of cellular networks, providing both multi-dimensional experimental evidence and theoretical insights. These findings can aid 3GPP and operators in improving the security design of future mobile RANs. For example, adjusting timer strategies to shorten the duration of unexpected user disconnections, or using encryption algorithms for the entire NAS signaling interaction to enhance encryption and integrity protection of NAS signaling. In the context of connected vehicles, the impact of such vulnerabilities is particularly critical. As secure communication between vehicles and infrastructure heavily relies on cellular networks, these vulnerabilities could compromise the integrity and safety of vehicular networks. Consequently, strengthening security measures in the air interface is essential to ensure the protection of connected vehicle systems in the future.

ACKNOWLEDGMENT

This work was supported by the National Natural Science Foundation of China (NSFC) under Grant [62302506].

REFERENCES

[1] 3GPP, "TS24.501: Non-Access-Stratum (NAS) for 5G," Dez. 2024.

[2] T. D. Hoang, C. Park, M. Son, T. Oh, S. Bae, J. Ahn, et al., "Ltesniffer: An open-source lte downlink/uplink eavesdropper", *Proc. 16th ACM Conf. on Security and Privacy in Wireless and Mobile Networks (WiSec)*, pp. 43-48, May 29–Jun. 1 2023.

[3] M. Lichtman, R. Jover, M. Labib, R. Rao, V. Marojevic and J. H. Reed, "LTE/LTE–A jamming spoofing and sniffing: threat assessment and mitigation", *IEEE Commun. Mag.*, vol. 54, no. 4, pp. 54-61, Apr. 2016.

[4] M. Labib, V. Marojevic, J. H. Reed and A. I. Zaghloul, "Enhancing the robustness of LTE systems: Analysis and evolution of the cell selection procedure", *IEEE Commun. Mag.*, vol. 55, no. 2, pp. 208-215, Feb. 2017.

[5] M. Labib, V. Marojevic, J. H. Reed and A. I. Zaghloul, "How to enhance the immunity of lte systems against rf spoofing", *2016 International Conference on Computing Networking and Communications (ICNC)*, pp. 1-5, 2016.

[6] M. Labib, V. Marojevic and J. H. Reed, "Analyzing and enhancing the resilience of LTE/LTE-A systems to RF spoofing", *2015 IEEE Conference on Standards for Communications and Networking (CSCN)*, pp. 315-320, 2015.

[7] S. Hussain, O. Chowdhury, S. Mehnaz, and E. Bertino, "LTEInspector: A systematic approach for adversarial testing of 4g lte," in *Network and Distributed Systems Security (NDSS) Symposium 2018*, 2018.

[8] R. P. Jover, "LTE security, protocol exploits and location tracking experimentation with low-cost software radio," *Computing Research Repository*, Jul. 2016.

[9] S. Erni, M. Kotuliak, P. Leu, M. Rschlin and S. Apkun, "AdaptOver: Adaptive overshadowing attacks in cellular networks", *Proc. 28th Annu. Int. Conf. Mobile Comput. And Netw.*, pp. 743-755, 2022.

[10] M. Kotuliak, S. Erni, P. Leu, M. Roeschlin, and S. ˇCapkun, "LTrack: Stealthy Tracking of Mobile Phones in LTE," in *USENIX Security Symposium*, 2022.

[11] D. Rupprecht, K. Kohls, T. Holz, and C. P¨opper, "Breaking LTE on Layer Two," in *IEEE S&P*, 2019.

[12] D. Rupprecht, K. Kohls, T. Holz, and C. P¨opper, "IMP4GT: IMPersonation Attacks in 4G Networks." in *NDSS Symposium*, 2020.

[13] Syed Rafiul Hussain, M. Echeverria, I. Karim, Omar Chowdhury and Elisa Bertino, "5GReasoner: A Property-Directed Security and Privacy Analysis Framework for 5G Cellular Network Pro-tocol", *Proceedings of ACM SIGSAC Conference on Computer and Communications Security*, pp. 669-684, 2019.

[14] W. Liu et al., "The dark side of scale: Insecurity of direct-to-cell satellite mega-constellations", *Proc. 45th IEEE Symp. Secur. Privacy (S&P)*, 2024.

[15] S. Purification, S. Wuthier, J. Kim, J. Kim and S.-Y. Chang, "Fake base station detection and blacklisting", *2024 33rd International Conference on Computer Communications and Networks (ICCCN)*, 2024.

[16] K. Hasan, S. Shetty and T. Oyedare, "Cross layer attacks on GSM mobile networks using software defined radios", *Proc. IEEE Annu. Consum. Commun. Netw. Conf.*, pp. 357-360, Jan 2017.

[17] Hongil Kim, Jiho Lee, Eunkyu Lee and Yongdae Kim, "Touching the untouchables: Dynamic security analysis of the LTE control plane", *IEEE Symposium on Security and Privacy*, pp. 1153-1168, 2019.

[18] Ross, Alexander J., et al. "Fixing Insecure Cellular System Information Broadcasts For Good." *Proceedings of the 27th International Symposium on Research in Attacks, Intrusions and Defenses*. 2024.

[19] 3GPP, "TS24.301: Non-Access-Stratum (NAS) for EPS," Dez. 2024.

[20] 3GPP, "TS36.331: E-UTRA; Radio Resource Control (RRC)," 2024.

[21] 3GPP, "TS24.008: Mobile Radio Interface Layer 3 Specification; Core Network Protocols; Stage 3," Mar. 2023.

[22] G. Lee et al., "This is your president speaking: Spoofing alerts in 4G LTE networks", *Proc. 17th Annu. Int. Conf. Mobile Syst. Appl. Services*, pp. 404-416, 2019.

Authorized licensed use limited to: UNIV OF HAWAII LIBRARY. Downloaded on February 11,2026 at 12:22:43 UTC from IEEE Xplore. Restrictions apply.