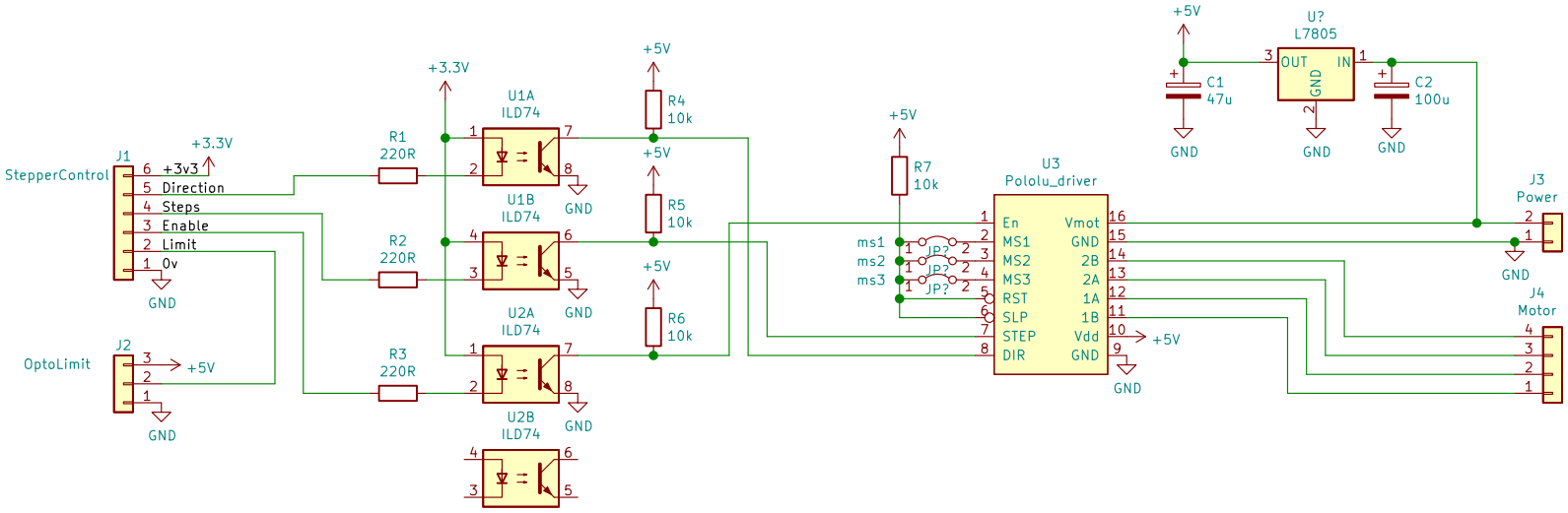

Stepper motor driver board

Sheet: /
File: stepper board.sch

Title:

Size: A4	Date:	**Rev:**
KiCad E.D.A. kicad 5.1.9+dfsg1-1		Id: 1/1