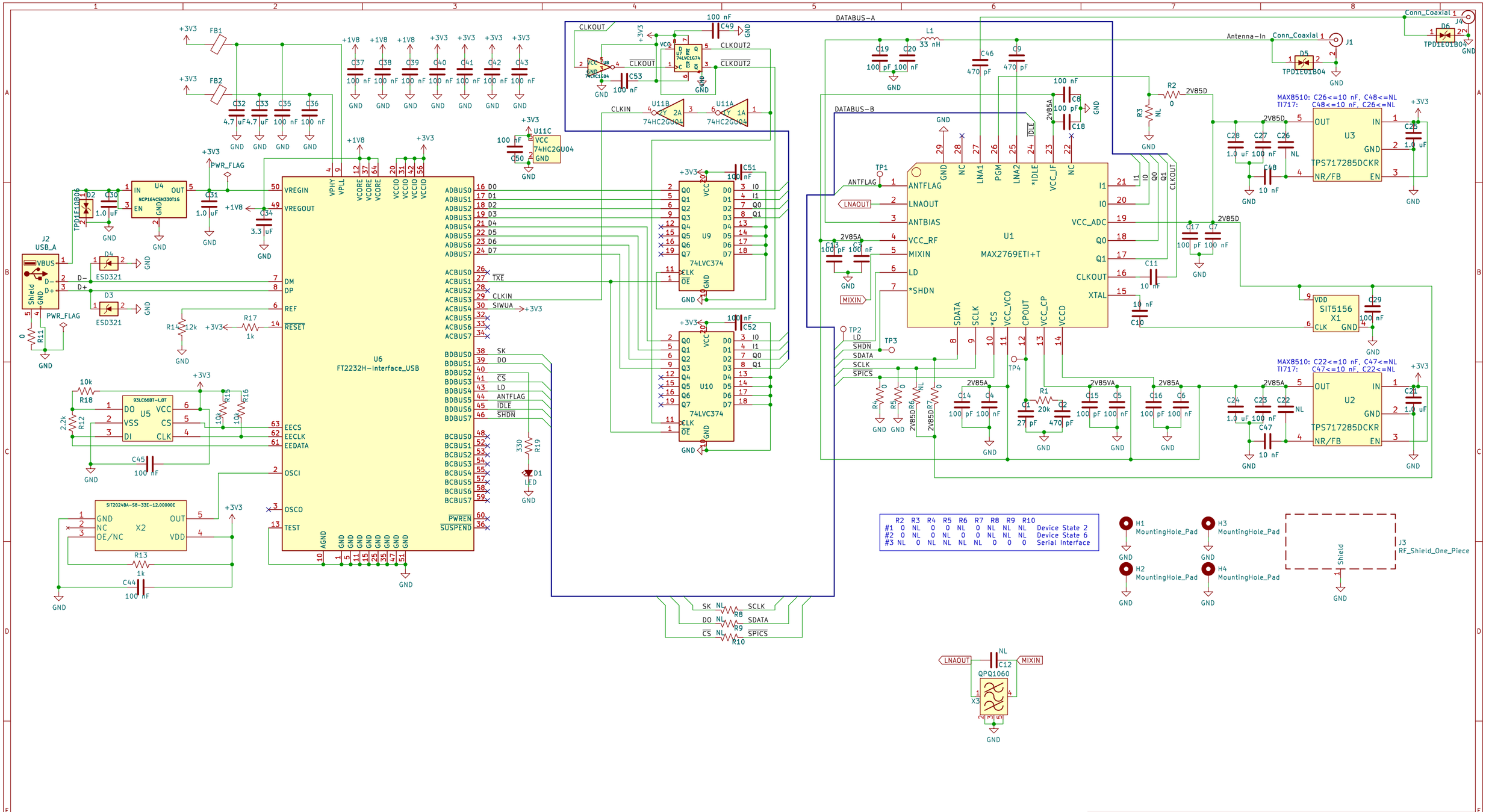

Author: W. Kyle Gilbertson
Maxim 2769 To FT2232H USB Converter (L1 IF Stream)
License: CC BY 4.0
creativecommons.org/licenses/by/4.0/

Sheet: /
File: L1IFStream.kicad_sch

Title: L1 IF Stream

Size: B	Date: 2023-06-19	Rev: 1
KiCad E.D.A. kicad 7.0.6		Id: 1/1