Biosensors and Bioelectronics 26 (2011) 4227–4230

Contents lists available at ScienceDirect

Biosensors and Bioelectronics

journal homepage: www.elsevier.com/locate/bios

Short communication

Sensitive detection of an Anthrax biomarker using a glassy carbon electrode with a consecutively immobilized layer of polyaniline/carbon nanotube/peptide

Tran Ngoc Huan, Thothadri Ganesh, Sung-Hwan Han, Moon-Young Yoon, Hoeil Chung*

Department of Chemistry and Research Institute for Convergence of Basic Sciences, Hanyang University, Seongdong-Gu, Haengdang-Dong, Seoul 133-791, Republic of Korea

ARTICLE INFO

Article history:
Received 12 January 2011
Received in revised form 18 March 2011
Accepted 27 March 2011
Available online 2 April 2011

Keywords:
Anthrax detection
Protective antigen
Polyaniline
Carbon nanotube
Peptide

ABSTRACT

Sensitivity of Anthrax protective antigen (PA) detection has been improved by directly immobilizing a PA-specific peptide onto a multi-wall carbon nanotube (MWCNT). The MWCNT was covalently immobilized onto a polyaniline (PANI) electrode, which was prepared via electropolymerization of the aniline monomer onto a glassy carbon electrode (GCE). Then, the PA-specific peptide was covalently immobilized to the MWCNT layer for measurement. When comparing this technique to that of PA immobilization on an insulting self assembled organic layer, the advantages of the MWCNT are clear. The MWCNT sensor resulted in enhanced electron transfer across the sensing layer. The resulting limit of detection (LOD) was 0.4 pM, a 13-fold improvement over that of our previous self-assembled organic layer was used for immobilization of the same peptide. Neither positive nor negative interferences were observed when a sample containing both 100 pM PA and bovine serum albumin (BSA) was measured, indicating good selectivity of the proposed sensor.

© 2011 Elsevier B.V. All rights reserved.

1. Introduction

Previously, we demonstrated a square wave voltammetry-based method for the detection of Anthrax via selective recognition of the protective antigen (PA) protein biomarker using a peptide instead of an antibody (Huan et al., 2009). The use of this peptide led to improved sensitivity compared to the detection limit of an antibody. Since the use of the peptide led to a denser immobilization on the sensing layer relative to that of the antibody, PA binding affinity increased, resulting in a limit of detection (LOD) of 5.2 pM. The direct electrochemical measurement of PA was possible due to the presence of rich electroactive groups in its pore. Several research groups previously confirmed the conductance of PA (Halverson et al., 2005; Neumeyer et al., 2006; Karginov et al., 2005). In our previous sensing scheme, a self-assembled layer of 3,3-dithiodipropionic acid di(N-hydroxysuccinimide ester) (DSP) on a gold electrode was used to conjugate the peptide. However, this DSP layer acted as an insulator that limited the efficiency of electron transfer from PA to the electrode surface.

A summary of different analytical approaches investigated for the detection of Anthrax has recently been reported (Huan et al., 2009). Among them, the analytical strategy based on surface-enhanced Raman scattering (SERS) has been widely studied due its high sensitivity of detection (Huan et al., 2009; Cheng et al., 2009; Ryu et al., 2010; Zhang et al., 2005, 2006a,b, 2009). However, reproducibility issues are a concern with SERS measurement and must be resolved to guarantee its use in practical applications. In addition, expensive peripheral systems, such as access to a Raman spectrometer, are required. Although SERS-based measurement has strong analytical potential, the electrochemical detection of Anthrax is preferable when simplicity and cost of measurement are critically considered.

The aim of this study was to improve the sensitivity of PA measurement through the enhancement of electron transfer within the sensing layer through the replacement of an insulating layer with polyaniline (PANI) that provides efficient electron transfer on a multiwall carbon nanotube (MWCNT). PANI is a well-known conducting polymer that has been widely utilized for electrochemical biosensors (Chang et al., 2007; Zhang et al., 2009; Wang et al., 2009; Komathi et al., 2009; Arora et al., 2007a,b; Zou et al., 2007) due to its advantages of an insensitive electrochemical response to compositional variations in the electrolytes and its simple synthesis.

To develop an electrochemical sensor, a carbon nanotube (CNT) dispersed solution is typically applied to an electrode surface, and the CNTs remaining after solvent evaporation are used for measurement (Trojanowics, 2006; Wu et al., 2003). However, the physisorption of CNTs onto an electrode surface is a major binding force, so the resulting sensor is not sufficiently durable for long-term repeatable measurements. In addition, the homogeneous distribution of CNTs on an electrode surface is not readily achievable. To overcome these hurdles, the immobilization of CNT on a pre-prepared self-assembled monolayer (SAM) has been accomplished (Diao and Liu, 2005; Wu et al., 2009; Viswanathan et al., 2009). However, the insulating SAM layer is still an issue as it

* Corresponding author. Tel.: +82 2 2220 0937; fax: +82 2 2299 0762.
E-mail address: hoeil@hanyang.ac.kr (H. Chung).

0956-5663/$ – see front matter © 2011 Elsevier B.V. All rights reserved.
doi:10.1016/j.bios.2011.03.034

substantially decreases the efficiency of electron transfer and eventually leads to decreased sensitivity (Huan et al., 2009; Love et al., 2005). In this study, MWCNT was directly immobilized onto a PANI layer without use of an insulting SAM layer. Then, the Anthrax PA-selective peptide was covalently immobilized onto the surface of the MWCNT layer. With the use of the peptide-immobilized MWCNT–PANI electrode, square wave voltammograms (SWVs) were collected for samples with different concentrations of PA in PBS buffer. Then, the resulting sensitivity and limit of detection (LOD) of the sensor were evaluated. To assess selectivity, the sensor response to PA in the presence of bovine serum albumin (BSA) was examined. Finally, to demonstrate practical applicability, the same sensor was used to measure different concentrations of PA in blood plasma.

2. Experimental

2.1. Electrochemical measurements

Phosphate buffered saline (PBS: pH 7.3, 140 mM NaCl, 2.7 mM KCl, 10 mM Na_2HPO_4, 1.8 mM KH_2PO_4) was purchased from Sigma–Aldrich. The Anthrax PA-selective peptide sequence (HKHAHNYRLPASGGKK) was determined using traditional peptide screening (phase display), and the resulting binding affinity of the peptide (K_d) was 4.06 ± 0.33 pM (Kim et al., 2006). The peptide was commercially synthesized at Peptron Inc. (Yusung-Gu, Daejeon, 305–340, Korea).

All of the measurements in this study were performed at room temperature using a standard cell with a three-electrode arrangement in which Ag/AgCl and Pt wires were used as the reference and counter electrodes, respectively. The potential measurement was performed relative to the Ag/AgCl reference electrode, and all electrochemical data were recorded using a potentiostat (eDAQ, Model PowerLab/4SP, Denistone East, NSW 2112, Australia). After each measurement, the sensing layer was immersed in a 1.0 M HNO_3 solution and carefully removed from the electrode using a pincette. Then, the electrode surface was carefully polished with abrasive paper (3000 grit) and washed with distilled water under ultrasonication for the preparation of a new sensing layer.

2.2. Preparation of the sensing layer

The overall procedure for preparation of the sensing layer is shown in Fig. 1. Initially, a polyaniline (PANI) film was formed via electropolymerization of aniline monomers onto the surface of the glassy carbon electrode (GCE). Cyclic voltammetry was chosen for electropolymerization because of its ability to monitor the formation of PANI film simply by examining resulting cyclic voltammograms (Guiseppi-Elie et al., 1993; Qu et al., 2005). Electropolymerization was conducted via insertion of the GCE into a 0.5 M aniline and 0.2 M HCl solution. Then, cyclic voltammograms were recorded between −200 and 800 mV with a scan rate of 50 mV/s. Simultaneous increases in the reduction and oxidation peaks were clearly observed, indicating polymerization progress on the GCE. After seven cycles, when the electrochemical signal stabilized, polymerization was terminated.

In parallel, the surface of the multiwall carbon nanotube (MWCNT) was modified to have a COCl functional group for the covalent binding of an amine group from either the PANI or a peptide (N-terminal). For this purpose, MWCNT (40 mg) was suspended in 10 mL concentrated HNO_3 for 8 h at 140 °C to produce a COOH group on its surface. Then, the COOH-functionalized MWCNT was rinsed with distilled water until the pH of the solution became neutral. The MWCNT was then dried at 80 °C in a vacuum oven. The COOH-functionalized MWCNT was further treated in a solution of $SOCl_2$ at 70 °C for 24 h under refluxing conditions to form COCl-functionalized MWCNT (simply COCl-MWCNT) (Burghard and Balasubramanian, 2005; Reddy et al., 2009; Tam et al., 2009). After drying, 10 mg of the COCl-MWCNT was ultrasonically dispersed for 1 h in 5.0 mL PBS buffer. The COCl-MWCNT suspended solution (10 μL) was applied for 40 minutes to the surface of the PANI film to allow the COCl group to react with the PANI amine group to immobilize the MWCNT. After immobilization, the MWCNT–PANI electrode was carefully cleaned using PBS buffer to remove any unreacted COCl-MWCNT. Fig. 2a shows an SEM image of the MWCNT–PANI electrode. It is clearly observable that rod-shaped MWCNTs are present and randomly distributed on the PANI layer.

Finally, the MWCNT–PANI electrode was immersed in a peptide-containing solution (53 μM) and allowed to bind peptide (Fig. 1). The same peptide (HKHAHNYRLPASGGKK) used in a previous study was also used for selective recognition of PA. As previously shown, sensitivity is also governed by the conjugation density of the peptide on a given electrode surface (Huan et al., 2009). Since the peptide was an insulator, the Faradaic current decreased as the peptide-immobilization proceeded and was stable after 1.5 h of peptide incubation (supplementary data). The steady current was the indirect indication of maximum peptide coverage. Finally, the peptide-immobilized MWCNT–PANI electrode was used to detect different concentrations of PA using square wave voltammetry. Before the detection of PA, the peptide-MWCNT–PANI electrode was stored for 1 h in PBS buffer at 4 °C to maintain activity of the peptide under the same PA-containing solution conditions.

3. Results and discussion

3.1. Optimization of the scan range

To determine the optimal scan range for PA detection, the square wave voltammogram (SWV) corresponding to the MWCNT–PANI layer was measured from 300 mV to −900 mV (in the cathode direction). This measurement was performed because the electrochemical response of the MWCNT–PANI layer was the background underlying the PA peak. The resulting SWV is shown in Fig. 2b (solid line). The current sharply decreased over the range from 0 mV to −200 mV. The steep slope corresponds to the left side of the PANI reduction peak that appeared around 250 mV as observed in a previous study (Arora et al., 2007a,b). The PA reduction peak was located around −100 mV, as observed in a previous study (Huan et al., 2009); therefore, it was present on acute slope of the SWV corresponding to MWCNT–PANI layer.

Typically, an acute slope background is not desirable for reliable quantitative analysis. To avoid the steep background, the scan was performed again from 150 mV to −900 mV. The resulting SWV is represented by the dashed line in Fig. 2b. The steep current change in the 0 to −200 mV range was greatly abated by simply changing the scan range for measurement; therefore, the PA reduction peak is easier to quantitatively analyze within this range. The SWV corresponding to the peptide-immobilized MWCNT–PANI layer is also shown (Fig. 2b, dotted line). The resulting current decreased slightly due to immobilization of the peptide. Finally, the scan range from 150 mV to −500 mV was used to collect SWVs of the samples with different PA concentrations.

3.2. Determination of PA concentration

The SWVs of different PA concentrations (20–100 pM range at intervals of 20 pM) were collected using the peptide-immobilized MWCNT–PANI electrode after allowing the sensor to fully bind PA

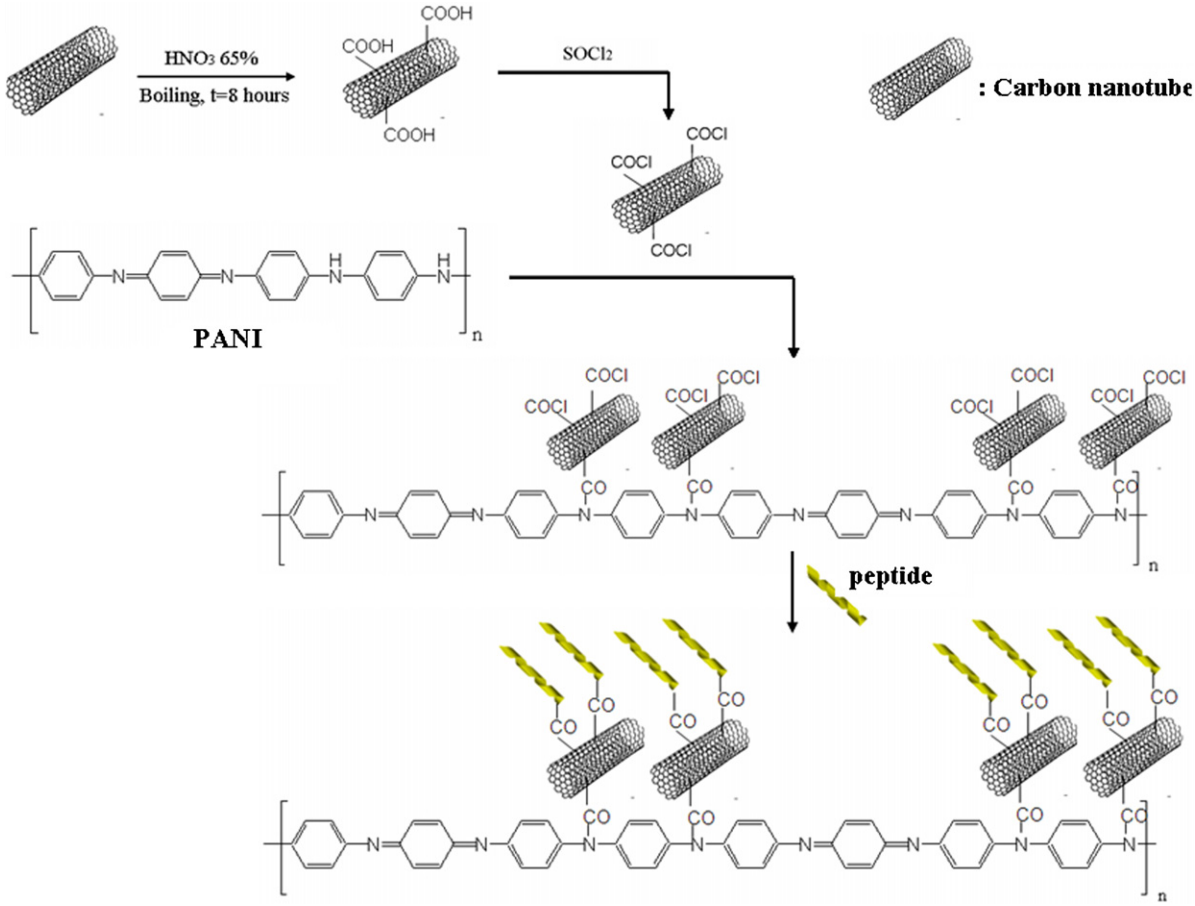

Fig. 1. Graphical description showing the overall procedure for preparation of the sensing layer.

peptide in the sample solution for 1.5 h. The resulting peak variations are shown in Fig. 3. From top to bottom, the SWVs correspond to PA concentrations of 20, 40, 60, 80, and 100 pM. As shown, the peak intensity increased according to variation in PA concentration. The non-origin behavior of PA peaks in Fig. 3 is mainly due to the background signal generated from PA itself. PA has good conductance due to negatively charged groups in its pore, so the resulting current background increased when PA bound to the sensing layer.

The calibration curve generated using the peak height is also shown (Fig. 3). At a given concentration, four independent measurements were taken from four individually prepared sensing layers. The response of the sensor was analyzed using regression analysis. The resulting slope (sensitivity), correlation coefficient (R^2), and limit of detection (LOD) were 1.41 ± 0.07 (nA/pM), 0.997, and 0.4 pM, respectively. The LOD was improved by 13-fold in comparison to that of a sensor in which a self-assembled organic layer was used for immobilization of the same peptide (LOD: 5.2 pM) (Huan et al., 2009). The active sensing area of the peptide-MWCNT–PANI sensor was 20% larger than that of the previous sensor; therefore, enhancement of the electrochemical signal was approximately nine times greater than that of the self-assembled organic layer utilized sensor when current density was normalized according to the area of the active sensor surface. The sensitivity achieved using the peptide-MWCNT–PANI sensor was comparable to that of a biosensor for the detection of PA, which was based on the measurement of fluorescence (Mukudan et al., 2010).

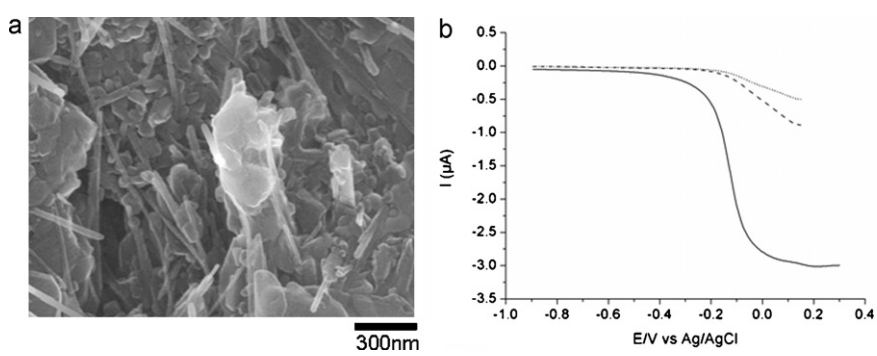

Fig. 2. SEM image of the MWCNT–PANI layer (a). Square wave voltammograms (SWVs) (b) corresponding to the MWCNT–PANI layer recorded by scanning from 300 mV to −900 mV (solid line) and from 150 mV to −900 mV (dashed line). SWV of the peptide-immobilized MWCNT–PANI layer scanned from 150 mV to −900 mV (dotted line). All scans were performed in the direction of the cathode.

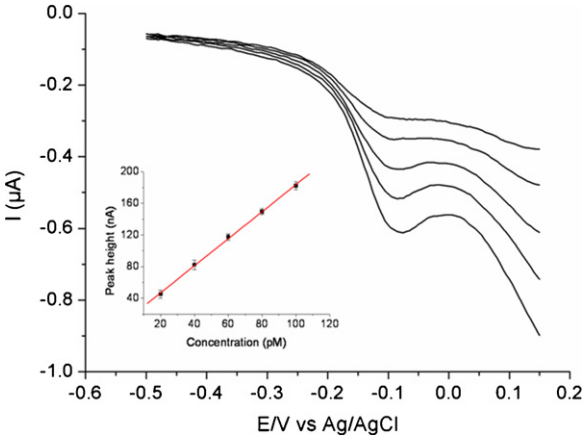

Fig. 3. Square wave voltammograms (SWVs) of samples with PA concentrations from 20 pM to 100 pM. From top to bottom, the corresponding PA concentrations are 20, 40, 60, 80, and 100 pM PA, respectively. The calibration curve generated according to peak height is also shown.

To evaluate the selectivity of the sensor, we initially investigated the SWVs of samples containing 100 pM bovine serum albumin (BSA) without PA. As expected, no significant peaks were observed, indicating no selectivity of the sensor for BSA. We also analyzed peaks from a sample containing both 100 pM BSA and PA. The resulting peak heights were similar in magnitude to those of the 100 pM PA without BSA. The average peak height of four independent measurements, even in the presence of BSA, was 179.3 ± 5.0 nA, while the calibration peak intensity of 100 pM PA without BSA was 182.3 nA. This result clearly demonstrates good selectivity of the sensor.

The long-term performance of the MWCNT-based sensor was evaluated by examining the sensor response of 100 pM PA on a daily basis for six days. For this purpose, six identical sensors were separately prepared (as described in the experimental section), and each sensor was used for a single measurement at a given day. For example, the first sensor was used to measure 100 pM PA at the first day. The second sensor was stored in a PBS buffer at 4 °C for 2 days and then used for measurement at the second day. The electrochemical signal was stable for up to 5 days (within the range of error in the calibration curve); however, it suddenly decreased by 60% on the sixth day. This sudden decrease in signal is an important issue to address in future studies.

Finally, to further demonstrate the practical applicability of the peptide-MWCNT–PANI sensor, measurements were performed for samples prepared in blood plasma (from rat, 0.45 μm filtered and lyophilized). The corresponding results are presented in the supplementary data.

4. Conclusions

By directly immobilizing PA-selective peptide on the MWCNT–PANI electrode, the resulting electrochemical signal increased, and a more sensitive measurement of PA for the diagnosis of Anthrax was achieved. Eliminating the self-assembled organic layer resulted in a substantial increase in electron transfer across the sensing layer. The proposed sensor scheme has wide applicability for the diagnosis of diverse diseases since a disease-specific antibody, peptide or aptamer could be immobilized onto the surface of the MWCNT–PANI electrode.

Acknowledgements

This research was supported by Basic Science Research Program through the National Research Foundation of Korea (NRF) funded by the Ministry of Education, Science and Technology (200900000000896) and the Research fund of HYU (HYU-2010-T) supported this research.

References

Arora, K., Prabhakar, N., Chand, S., Malhotra, B.D., 2007a. Biosens. Bioelectron. 23 (5), 613–620.
Arora, K., Prabhakar, N., Chand, S., Malhotra, B.D., 2007b. Anal. Chem. 79 (16), 6152–6158.
Burghard, M., Balasubramanian, K., 2005. Small 1 (2), 180–192.
Chang, H., Yuan, Y., Shi, N., Guan, Y., 2007. Anal. Chem. 79 (13), 5111–5115.
Cheng, H.W., Huan, S.H., Wu, H.L., Shen, G.L., Yu, R.Q., 2009. Anal. Chem. 81 (24), 9902–9912.
Diao, P., Liu, Z., 2005. J. Phys. Chem. B 109 (44), 20906–20913.
Guiseppi-Elie, A., Pradhan, S.R., Wilson, A.M., 1993. Chem. Mater. 5, 1474–1480.
Halverson, K.M., Panchal, R.G., Nguyen, T.L., Gussio, R., Little, S.F., Misakian, M., Bavari, S., Kasianowicz, J.J., 2005. J. Biol. Chem. 280 (40), 34056–34062.
Huan, T.N., Ha, V.T.T., Hung, L.Q., Yoon, M.Y., Han, S.H., Chung, H., 2009. Biosens. Bioelectron. 25 (2), 469–474.
Kim, J., Park, H.Y., Choi, K.J., Chung, H., Han, S.H., Lee, J.S., Park, J.S., Yoon, M.Y., 2006. J. Mol. Microb. Biotechnol. 16 (11), 1784–1790.
Komathi, S., Gopalan, A.I., Lee, K.P., 2009. Biosens. Bioelectron. 25 (4), 944–947.
Karginov, V.A., Nestorovich, E.M., Moayeri, M., Leppla, S.H., Bezrukov, S.M., 2005. PNAS 102 (42), 15075–15080.
Love, J.C., Estroff, L.A., Kriebel, J.K., Nuzzo, R.G., Whitesides, G.M., 2005. Chem. Rev. 105 (4), 1103–1169.
Mukudan, H., Xie, H., Price, D., Sutherland, J.Z.K., Grace, W.K., Anderson, A.S., Martinet, J.S., Hartman, N., Swanson, B.I., 2010. Anal. Chem. 82 (1), 136–144.
Neumeyer, T., Tonello, F., Molin, F.D., Schiffler, B., Benz, R., 2006. J. Biol. Chem. 281 (43), 32335–32343.
Qu, F., Yang, M., Jiang, J., Shen, G., Yu, R., 2005. Anal. Biochem. 344 (1), 108–114.
Reddy, K.R., Sin, B.C., Ryu, K.S., Kim, J.C., Chung, H., Lee, Y., 2009. Synth. Met. 159 (7–8), 595–603.
Ryu, K., Haes, A.J., Park, H.Y., Nah, S., Kim, J., Chung, H., Yoon, M.Y., Han, S.H., 2010. J. Raman Spectrosc. 41 (2), 121–124.
Tam, P.D., Hieu, N.V., Chien, N.D., Tuan, L.A., Tuan, M.A., 2009. J. Immunol. Methods 350 (1–2), 118–124.
Trojanowics, M., 2006. TrAC-Trends Anal. Chem. 25 (5), 480–489.
Viswanathan, S., Radecka, H., Radecki, J., 2009. Biosens. Bioelectron. 24 (9), 2772–2777.
Wang, Z., Liu, S., Wu, P., Cai, C., 2009. Anal. Chem. 81 (4), 1638–1645.
Wu, K., Fei, J., Bai, W., Hu, S., 2003. Anal. Bioanal. Chem. 376 (2), 205–209.
Wu, Z., Zhen, Z., Jiang, J.H., Shen, G.L., Yu, R.Q., 2009. J. Am. Chem. Soc. 131 (34), 12325–12332.
Zhang, J., Lei, J., Liu, Y., Zhao, J., Ju, H., 2009. Biosens. Bioelectron. 24 (7), 1858–1863.
Zhang, X., Yonzon, C.R., Duyne, R.P.V., 2006a. J. Mater. Res. 21 (5), 1083–1092.
Zhang, X., Yuong, M.A., Lyandres, O., Duyne, R.P.V., 2005. J. Am. Chem. Soc. 127 (12), 4484–4489.
Zhang, X., Zhao, J., Whitney, A.V., Elam, J.W., Duyne, R.P.V., 2006b. J. Am. Chem. Soc. 128 (31), 10304–10309.
Zou, Y., Sun, L.X., Xu, F., 2007. Biosens. Bioelectron. 22 (11), 2669–2674.