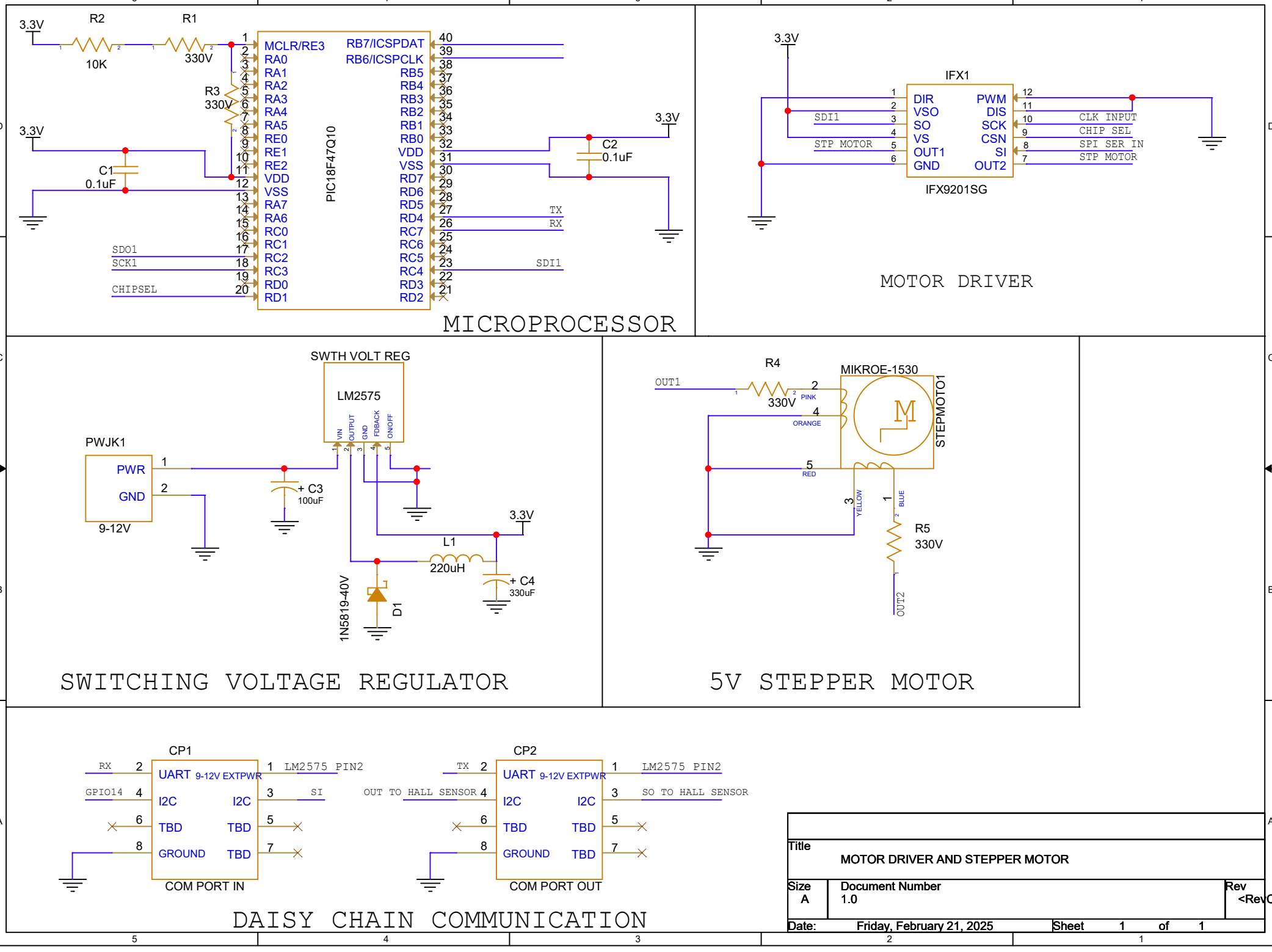
MICROPROCESSOR
PIC18F47Q10
MCLR/RE3
RA0
RA1
RA2
RA3
RA4
RA5
RE0
RE1
RE2
VDD
VSS
RA7
RA6
RC0
RC1
RC2
RC3
RD0
RD1
RB7/ICSPDAT
RB6/ICSPCLK
RB5
RB4
RB3
RB2
RB1
RB0
VDD
VSS
RD7
RD6
RD5
RD4
RC7
RC6
RC5
RC4
RD3
RD2
3.3V
R2
10K
R1
330V
R3
330V
C1
0.1uF
C2
0.1uF
SDO1
SCK1
CHIPSEL
TX
RX
SDI1
MOTOR DRIVER
IFX1
IFX9201SG
DIR
VSO
SO
VS
OUT1
GND
PWM
DIS
SCK
CSN
SI
OUT2
SDI1
STP MOTOR
CLK INPUT
CHIP SEL
SPI SER IN
STP MOTOR
SWITCHING VOLTAGE REGULATOR
SWTH VOLT REG
LM2575
VIN
OUTPUT
GND
FDBACK
ON/OFF
PWJK1
PWR
GND
9-12V
+ C3
100uF
L1
220uH
+ C4
330uF
1N5819-40V
D1
5V STEPPER MOTOR
R4
330V
OUT1
MIKROE-1530
STEPMOTO1
PINK
ORANGE
RED
YELLOW
BLUE
R5
330V
OUT2
DAISY CHAIN COMMUNICATION
CP1
UART
9-12V EXTPWR
I2C
TBD
GROUND
COM PORT IN
RX
GPIO14
LM2575 PIN2
SI
CP2
COM PORT OUT
TX
OUT TO HALL SENSOR
SO TO HALL SENSOR
Title
MOTOR DRIVER AND STEPPER MOTOR
Size
A
Document Number
1.0
Rev
<RevCo
Date:
Friday, February 21, 2025
Sheet
1
of
1