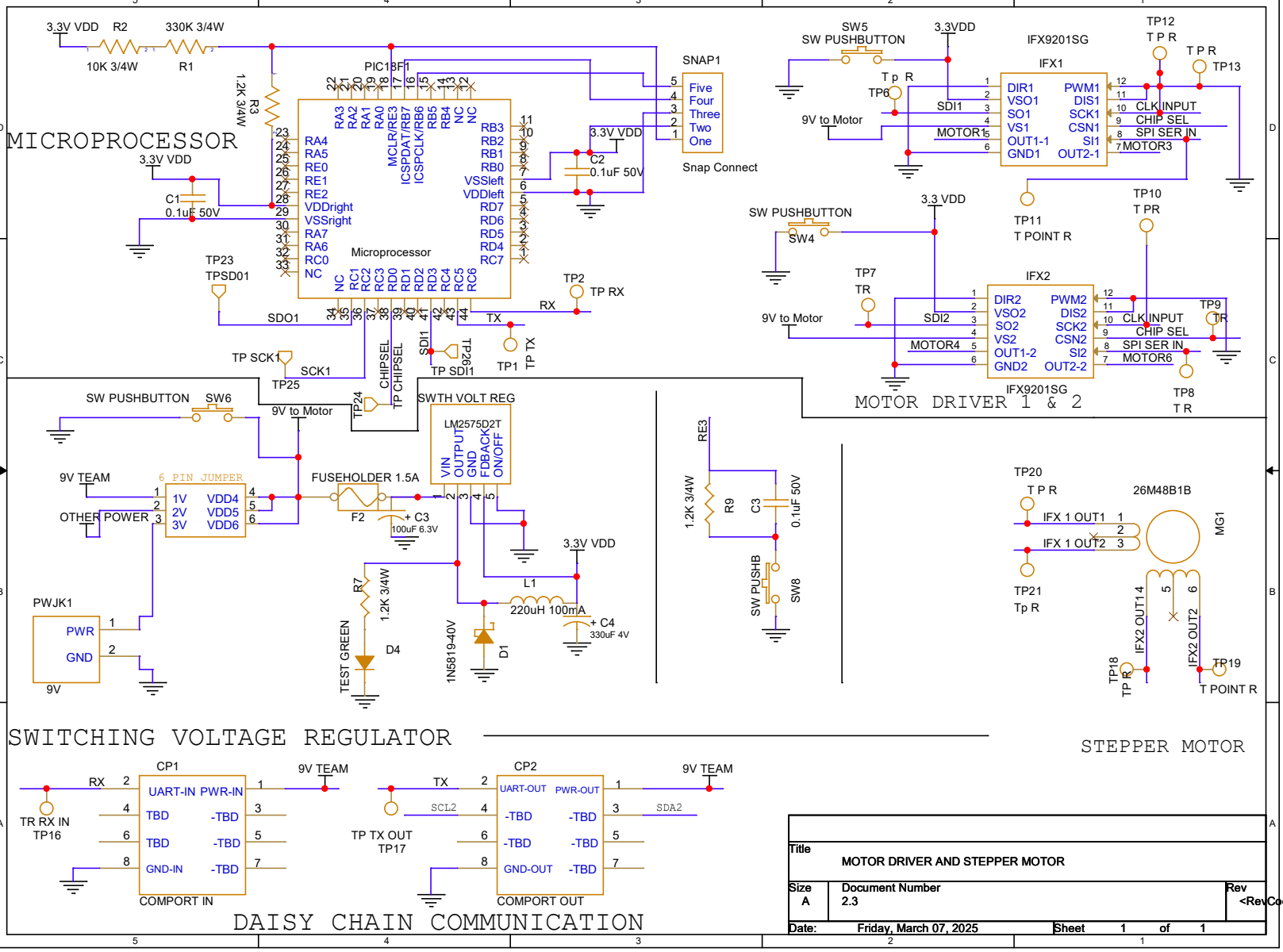

Title	MOTOR DRIVER AND STEPPER MOTOR	
Size A	Document Number 2.3	Rev <RevCod
Date: Friday, March 07, 2025	Sheet 1 of 1	