1 Introduction

In the last decades of the twentieth century, scientists sought to combine two of the century's most influential and revolutionary theories: information theory and quantum mechanics. Their success gave rise to a new view of computation and information. This new view, quantum information theory, changed forever how computation, information, and their connections with physics are thought about, and it inspired novel applications, including some wildly different algorithms and protocols. This view and the applications it spawned are the subject of this book.

Information theory, which includes the foundations of both computer science and communications, abstracted away the physical world so effectively that it became possible to talk about the major issues within computer science and communications, such as the efficiency of an algorithm or the robustness of a communication protocol, without understanding details of the physical devices used for the computation or the communication. This ability to ignore the underlying physics proved extremely powerful, and its success can be seen in the ubiquity of the computing and communications devices around us. The abstraction away from the physical had become such a part of the intellectual landscape that the assumptions behind it were almost forgotten. At its heart, until recently, information sciences have been firmly rooted in classical mechanics. For example, the Turing machine is a classical mechanical model that behaves according to purely classical mechanical principles.

Quantum mechanics has played an ever-increasing role in the development of new and more efficient computing devices. Quantum mechanics underlies the working of traditional, classical computers and communication devices, from the transistor through the laser to the latest hardware advances that increase the speed and power and decrease the size of computer and communications components. Until recently, the influence of quantum mechanics remained confined to the low-level implementation realm; it had no effect on how computation or communication was thought of or studied.

In the early 1980s, a few researchers realized that quantum mechanics had unanticipated implications for information processing. Charles Bennett and Gilles Brassard, building on ideas of Stephen Wiesner, showed how nonclassical properties of quantum measurement provided a provably secure mechanism for establishing a cryptographic key. Richard Feynman, Yuri Manin, and others recognized that certain quantum phenomena—phenomena associated with so-called

entangled particles—could not be simulated efficiently by a Turing machine. This observation led to speculation that perhaps these quantum phenomena could be used to speed up computation in general. Such a program required rethinking the information theoretic model underlying computation, taking it out of the purely classical realm.

Quantum information processing, a field that includes quantum computing, quantum cryptography, quantum communications, and quantum games, explores the implications of using quantum mechanics instead of classical mechanics to model information and its processing. Quantum computing is not about changing the physical substrate on which computation is done from classical to quantum, but rather changing the notion of computation itself. The change starts at the most basic level: the fundamental unit of computation is no longer the bit, but rather the quantum bit or qubit. Placing computation on a quantum mechanical foundation led to the discovery of faster algorithms, novel cryptographic mechanisms, and improved communication protocols.

The phrase *quantum computing* does not parallel the phrases *DNA computing* or *optical computing*: these describe the substrate on which computation is done without changing the notion of computation. *Classical computers*, the ones we all have on our desks, make use of quantum mechanics, but they compute using bits, not qubits. For this reason, they are not considered quantum computers. A quantum or classical computer may or may not be an optical computer, depending on whether optical devices are used to carry out the computation. Whether the computer is quantum or classical depends on whether the information is represented and manipulated in a quantum or classical way. The phrase *quantum computing* is closer in character to *analog computing* because the computational model for analog computing differs from that of standard computing: a continuum of values, rather than only a discrete set, is allowed. While the phrases are parallel, the two models differ greatly in that analog computation does not support entanglement, a key resource for quantum computation, and measurements of a quantum computer's registers can yield only a small, discrete set of values. Furthermore, while a qubit can take on a continuum of values, in many ways a qubit resembles a bit, with its two discrete values, more than it does analog computation. For example, as we will see in section 4.3.1, only one bit's worth of information can be extracted from a qubit by measurement.

The field of quantum information processing developed slowly in the 1980s and early 1990s as a small group of researchers worked out a theory of quantum information and quantum information processing. David Deutsch developed a notion of a quantum mechanical Turing machine. Daniel Bernstein, Vijay Vazirani, and Andrew Yao improved upon his model and showed that a quantum Turing machine could simulate a classical Turing machine, and hence any classical computation, with at most a polynomial time slowdown. The standard quantum circuit model was then defined, which led to an understanding of quantum complexity in terms of a set of basic quantum transformations called quantum gates. These gates are theoretical constructs that may or may not have direct analogs in the physical components of an actual quantum computer.

In the early 1990s, researchers developed the first truly quantum algorithms. In spite of the probabilistic nature of quantum mechanics, the first quantum algorithms, for which superiority

over classical algorithms could be proved, give the correct answer with certainty. They improve upon classical algorithms by solving in polynomial time with certainty a problem that can be solved in polynomial time only with high probability using classical techniques. Such a result is of no direct practical interest, since the impossibility of building a perfect machine reduces any practical machine running any algorithm to solving a problem only with high probability. But such results were of high theoretical interest, since they showed for the first time that quantum computation is theoretically more powerful than classical computation for certain computational problems.

These results caught the interest of various researchers, including Peter Shor, who in 1994 surprised the world with his polynomial-time quantum algorithm for factoring integers. This result provided a solution to a well-studied problem of practical interest. A classical polynomial-time solution had long been sought, to the point where the world felt sufficiently confident that no such solution existed that many security protocols, including the widely used RSA algorithm, base their security entirely on the computational difficulty of this problem. It is unknown whether an efficient classical solution exists, so Shor's result does not prove that quantum computers can solve a problem more efficiently than a classical computer. But even in the unlikely event that a polynomial-time classical algorithm is found for this problem, it would be an indication of the elegance and effectiveness of the quantum information theory point of view that a quantum algorithm, in spite of all the unintuitive aspects of quantum mechanics, was easier to find.

While Shor's result sparked a lot of interest in the field, doubts as to its practical significance remained. Quantum systems are notoriously fragile. Key properties, such as quantum entanglement, are easily disturbed by environmental influences that cause the quantum states to *decohere*. Properties of quantum mechanics, such as the impossibility of reliably copying an unknown quantum state, made it look unlikely that effective error-correction techniques for quantum computation could ever be found. For these reasons, it seemed unlikely that reliable quantum computers could be built.

Luckily, in spite of serious and widespread doubts as to whether quantum information processing could ever be practical, the theory itself proved so tantalizing that researchers continued to explore it. As a result, in 1996 Shor and Robert Calderbank, and independently Andrew Steane, saw a way to finesse the seemingly show-stopping problems of quantum mechanics to develop quantum error correction techniques. Today, quantum error correction is arguably the most mature area of quantum information processing.

How practical quantum computing and quantum information will turn out is still unknown. No fundamental physical principles are known that prohibit the building of large-scale and reliable quantum computers. Engineering issues, however, remain. As of this writing, laboratory experiments have demonstrated quantum computations with several quantum bits performing dozens of quantum operations. Myriad promising approaches are being explored by theorists and experimentalists around the world, but much uncertainty remains as to how, when, or even whether, a quantum computer capable of carrying out general quantum computations on hundreds of qubits will be built.

Quantum computational approaches improve upon classical methods for a number of specialized tasks. The extent of quantum computing's applicability is still being determined. It does not provide efficient solutions to all problems; neither does it provide a universal way of circumventing the slowing of Moore's law. Strong limitations on the power of quantum computation are known; for many problems, it has been proven that quantum computation provides no significant advantage over classical computation. Grover's algorithm, the other major algorithm of the mid-1990s, provides a small speedup for unstructured search algorithms. But it is also known that this small speedup is the most that quantum algorithms can attain. Grover's search algorithm applies to unstructured search. For other search problems, such as searching an ordered list, quantum computation provides no significant advantage over classical computation. Simulation of quantum systems is the other significant application of quantum computation known in the mid-1990s. Of interest in its own right, the simulation of increasingly larger quantum systems may provide a bootstrap that will ultimately lead to the building of a scalable quantum computer.

After Grover's algorithm, there was a hiatus of more than five years before a significantly new algorithm was discovered. During that time, other areas of quantum information processing, such as quantum error correction, advanced significantly. In the early 2000s, several new algorithms were discovered. Like Shor's algorithm, these algorithms solve specific problems with narrow, if important, applications. Novel approaches to constructing quantum algorithms also developed. Investigations of quantum simulation from a quantum-information-processing point of view have led to improved classical techniques for simulating quantum systems, as well as novel quantum approaches. Similarly, the quantum-information-processing point of view has led to novel insights into classical computing, including new classical algorithms. Furthermore, alternatives to the standard circuit model of quantum computation have been developed that have led to new quantum algorithms, breakthroughs in building quantum computers, new approaches to robustness, and significant insights into the key elements of quantum computation.

However long it takes to build a scalable quantum computer and whatever the breadth of applications turns out to be, quantum information processing has changed forever the way in which quantum physics is understood. The quantum information processing view of quantum mechanics has done much to clarify the character of key aspects of quantum mechanics such as quantum measurement and entanglement. This advancement in knowledge has already had applications outside of quantum information processing to the creation of highly entangled states used for microlithography at scales below the wavelength limit and for extraordinarily accurate sensors. The precise practical consequences of this increased understanding of nature are hard to predict, but the unification of the two theories that had the most profound influence on the technological advances of the twentieth century can hardly fail to have profound effects on technological and intellectual developments throughout the twenty-first.

Part I of this book covers the basic building blocks of quantum information processing: quantum bits and quantum gates. Physical motivation for these building blocks is given and tied to the key quantum concepts of quantum measurement, quantum state transformations, and entanglement between quantum subsystems. Each of these concepts is explored in depth. Quantum key

distribution, quantum teleportation, and quantum dense coding are introduced along the way. The final chapter of part I shows that anything that can be done on a classical computer can be done with comparable efficiency on a quantum computer.

Part II covers quantum algorithms. It begins with a description of some of the most common elements of quantum computation. Since the advantage of quantum computation over classical computation is all about efficiency, part II carefully defines notions of complexity. Part II also discusses known bounds on the power of quantum computation. A number of simple algorithms are described. Full chapters are devoted to Shor's algorithm and Grover's algorithm.

Part III explores entanglement and robust quantum computation. A discussion of quantum subsystems leads into discussions of quantifying entanglement and of decoherence, the environmental errors affecting a quantum system because it is really a part of a larger quantum system. The elegant and important topic of quantum error correction fills a chapter, followed by a chapter on techniques to achieve fault tolerance. The book finishes with brief descriptions and pointers to references for many quantum information processing topics the book could not cover in depth. These include further quantum algorithms and protocols, adiabatic, cluster state, holonomic, and topological quantum computing, and the impact quantum information processing has had on classical computer science and physics.

I QUANTUM BUILDING BLOCKS

Quantum mechanics, that mysterious, confusing discipline, which none of us really understands, but which we know how to use.
—*Murray Gell-Mann* [126]

2 Single-Qubit Quantum Systems

Quantum bits are the fundamental units of information in quantum information processing in much the same way that bits are the fundamental units of information for classical processing. Just as there are many ways to realize classical bits physically (two voltage levels, lights on or off in an array, positions of toggle switches), there are many ways to realize quantum bits physically. As is done in classical computer science, we will concern ourselves only rarely with how the quantum bits are realized. For the sake of concretely illustrating quantum bits and their properties, however, section 2.1 looks at the behavior of polarized photons, one of many possible realizations of quantum bits.

Section 2.2 abstracts key properties from the polarized photon example of section 2.1 to give a precise definition of a quantum bit, or qubit, and a description of the behavior of quantum bits under measurement. Dirac's bra / ket notation, the standard notation used throughout quantum information processing as well as quantum mechanics, is introduced in this section. Section 2.4 describes the first application of quantum information processing: quantum key distribution. The chapter concludes with a detailed discussion of the state space of a single-qubit system.

2.1 The Quantum Mechanics of Photon Polarization

A simple experiment illustrates some of the nonintuitive behavior of quantum systems, behavior that is exploited to good effect in quantum algorithms and protocols. This experiment can be performed by the reader using only minimal equipment: a laser pointer and three polaroids (polarization filters), readily available from any camera supply store. The formalisms of quantum mechanics that describe this simple experiment lead directly to a description of the quantum bit, the fundamental unit of quantum information on which quantum information processing is done. The experiment not only gives a concrete realization of a quantum bit, but it also illustrates key properties of quantum measurement. We encourage you to obtain the equipment and perform the experiment yourself.

2.1.1 A Simple Experiment

Shine a beam of light on a projection screen. When polaroid A is placed between the light source and the screen, the intensity of the light reaching the screen is reduced. Let us suppose that the polarization of polaroid A is horizontal (figure 2.1).

Next, place polaroid C between polaroid A and the projection screen. If polaroid C is rotated so that its polarization is orthogonal (vertical) to the polarization of A, no light reaches the screen (figure 2.2).

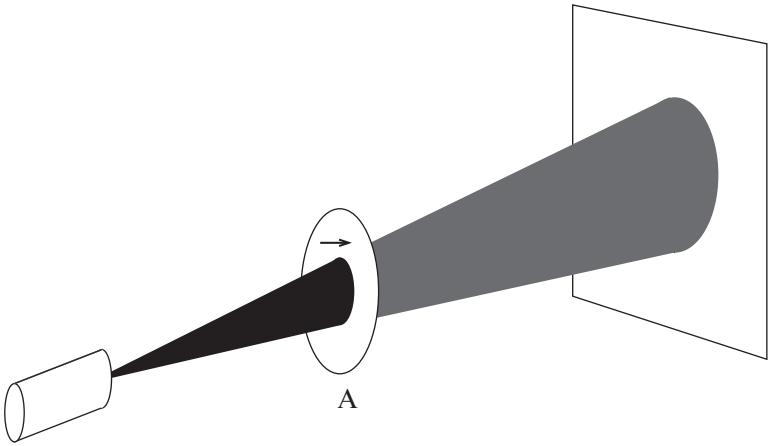

Figure 2.1
Single polaroid attenuates unpolarized light by 50 percent.

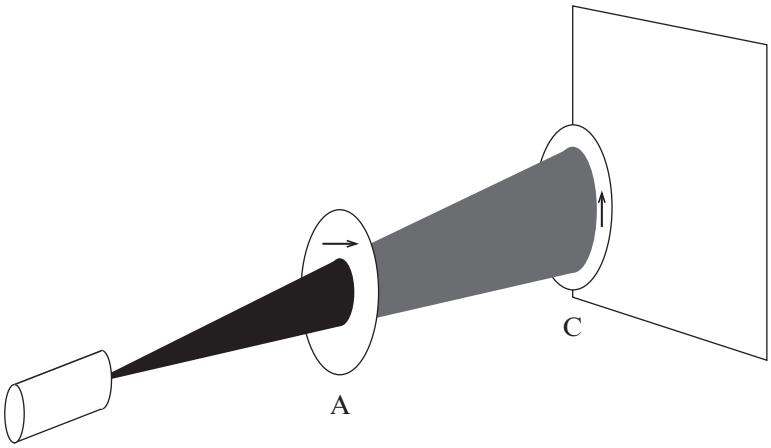

Figure 2.2
Two orthogonal polaroids block all photons.

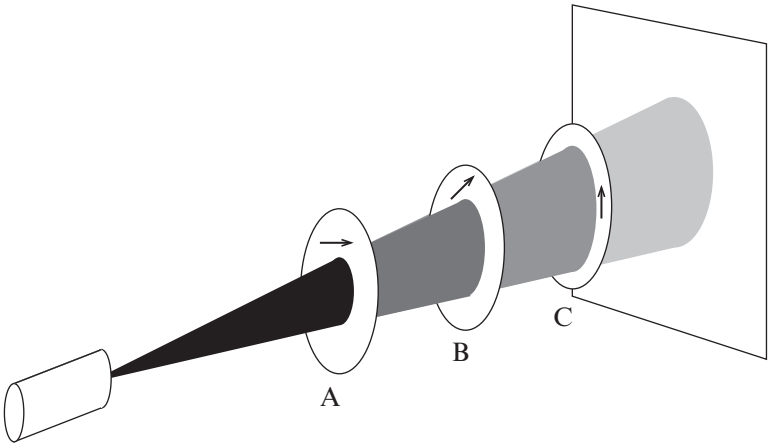

Figure 2.3
Inserting a third polaroid allows photons to pass.

Finally, place polaroid B between polaroids A and C. One might expect that adding another polaroid will not make any difference; if no light got through two polaroids, then surely no light will pass through three! Surprisingly, at most polarization angles of B, light shines on the screen. The intensity of this light will be maximal if the polarization of B is at 45 degrees to both A and C (figure 2.3).

Clearly the polaroids cannot be acting as simple sieves; otherwise, inserting polaroid B could not increase the number of photons reaching the screen.

2.1.2 A Quantum Explanation

For a bright beam of light, there is a classical explanation of the experiment in terms of waves. Versions of the experiment described here, using light so dim that only one photon at a time interacts with the polaroid, have been done with more sophisticated equipment. The results of these single photon experiments can be explained only using quantum mechanics; the classical wave explanation no longer works. Furthermore, it is not just light that behaves in this peculiar way. The quantum mechanical explanation of the experiment consists of two parts: a model of a photon's polarization state and a model of the interaction between a polaroid and a photon. The description of this experiment, and the definition of a qubit, use basic notions of linear algebra such as *vector*, *basis*, *orthonormal*, and *linear combination*. Linear algebra is used throughout the book; we briefly remind readers of the meanings of these concepts in section 2.2. Section 2.6 suggests some books on linear algebra.

Quantum mechanics models a photon's polarization state by a unit vector, a vector of length 1, pointing in the appropriate direction. We write $|\uparrow\rangle$ and $|\rightarrow\rangle$ for the unit vectors that represent vertical and horizontal polarization respectively. Think of $|v\rangle$ as a vector with some arbitrary label v. In quantum mechanics, the standard notation for a vector representing a quantum state

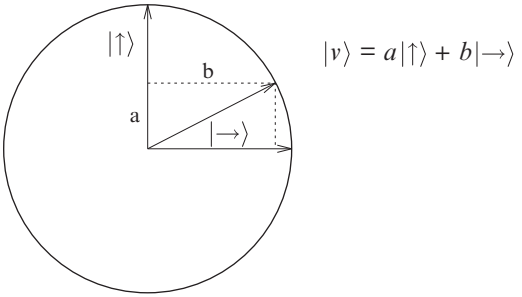

Figure 2.4
Measurement of state $|v\rangle = a|\uparrow\rangle + b|\rightarrow\rangle$ by a measuring device with preferred basis $\{|\uparrow\rangle, |\rightarrow\rangle\}$.

is $|v\rangle$, just as $\vec{v}$ or $\mathbf{v}$ are notations used for vectors in other settings. This notation is part of a more general notation, Dirac's notation, that will be explained in more detail in sections 2.2 and 4.1. An arbitrary polarization can be expressed as a linear combination $|v\rangle = a|\uparrow\rangle + b|\rightarrow\rangle$ of the two basis vectors $|\uparrow\rangle$ and $|\rightarrow\rangle$. For example, $|\nearrow\rangle = \frac{1}{\sqrt{2}}|\uparrow\rangle + \frac{1}{\sqrt{2}}|\rightarrow\rangle$ is a unit vector representing polarization of 45 degrees. The coefficients a and b in $|v\rangle = a|\uparrow\rangle + b|\rightarrow\rangle$ are called the *amplitudes* of $|v\rangle$ in the directions $|\uparrow\rangle$ and $|\rightarrow\rangle$ respectively (see figure 2.4). When a and b are both non-zero, $|v\rangle = a|\uparrow\rangle + b|\rightarrow\rangle$ is said to be a *superposition* of $|\uparrow\rangle$ and $|\rightarrow\rangle$.

Quantum mechanics models the interaction between a photon and a polaroid as follows. The polaroid has a preferred axis, its polarization. When a photon with polarization $|v\rangle = a|\uparrow\rangle + b|\rightarrow\rangle$ meets a polaroid with preferred axis $|\uparrow\rangle$, the photon will get through with probability $|a|^2$ and will be absorbed with probability $|b|^2$; the probability that a photon passes through the polaroid is the square of the magnitude of the amplitude of its polarization in the direction of the polaroid's preferred axis. The probability that the photon is absorbed by the polaroid is the square of the magnitude of the amplitude in the direction perpendicular to the polaroid's preferred axis. Furthermore, any photon that passes through the polaroid will now be polarized in the direction of the polaroid's preferred axis. The probabilistic nature of the interaction and the resulting change of state are features of all interactions between qubits and measuring devices, no matter what their physical realization.

In the experiment, any photons that pass through polaroid A will leave polarized in the direction of polaroid A's preferred axis, in this case horizontal, $|\rightarrow\rangle$. A horizontally polarized photon has no amplitude in the vertical direction, so it has no chance of passing through polaroid C, which was given a vertical orientation. For this reason, no light reaches the screen. Had polaroid C been in any other orientation, a horizontally polarized photon would have some amplitude in the direction of polaroid C's preferred axis, and some photons would reach the screen.

To understand what happens once polaroid B, with preferred axis $|\nearrow\rangle$, is inserted, it is helpful to write the horizontally polarized photon's polarization state $|\rightarrow\rangle$ as

$$|\rightarrow\rangle = \frac{1}{\sqrt{2}}|\nearrow\rangle - \frac{1}{\sqrt{2}}|\nwarrow\rangle.$$

Any photon that passes through polaroid A becomes horizontally polarized, so the amplitude of any such photon's state $|\rightarrow\rangle$ in the direction $|\nearrow\rangle$ is $\frac{1}{\sqrt{2}}$. Applying the quantum theory we just learned tells us that a horizontally polarized photon will pass through polaroid B with probability $\frac{1}{2} = |\frac{1}{\sqrt{2}}|^2$. Any photons that have passed through polaroid B now have polarization $|\nearrow\rangle$. When these photons hit polaroid C, they do have amplitude in the vertical direction, so some of them (half) will pass thorough polaroid C and hit the screen (see figure 2.3). In this way, quantum mechanics explains how more light can reach the screen when the third polaroid is added, and it provides a means to compute how much light will reach the screen.

In summary, the polarization state of a photon is modeled as a unit vector. Its interaction with a polaroid is probabilistic and depends on the amplitude of the photon's polarization in the direction of the polaroid's preferred axis. Either the photon will be absorbed or the photon will leave the polaroid with its polarization aligned with the polaroid's preferred axis.

2.2 Single Quantum Bits

The space of possible polarization states of a photon is an example of a *quantum bit*, or *qubit*. A qubit has a continuum of possible values: any state represented by a unit vector $a|\uparrow\rangle + b|\rightarrow\rangle$ is a legitimate qubit value. The amplitudes a and b can be complex numbers, even though complex amplitudes were not needed for the explanation of the experiment. (In the photon polarization case, the imaginary coefficients correspond to *circular polarization*.)

In general, the set of all possible states of a physical system is called the *state space* of the system. Any quantum mechanical system that can be modeled by a two-dimensional complex vector space can be viewed as a qubit. (There is redundancy in this representation in that any vector multiplied by a modulus one [unit length] complex number represents the same quantum state. We discuss this redundancy carefully in sections 2.5 and 3.1.) Such systems, called *two-state quantum systems*, include photon polarization, electron spin, and the ground state together with an excited state of an atom. The *two-state* label for these systems does not mean that the state space has only two states—it has infinitely many—but rather that all possible states can be represented as a linear combination, or superposition, of just two states. For a two-dimensional complex vector space to be viewed as a qubit, two linearly independent states, labeled $|0\rangle$ and $|1\rangle$, must be distinguished. For the theory of quantum information processing, all two-state systems, whether they be electron spin or energy levels of an atom, are equally good. From a practical point of view, it is as yet unclear which two-state systems will be most suitable for physical realizations of quantum information processing devices such as quantum computers; it is likely that a variety of physical representation of qubits will be used.

Dirac's bra / ket notation is used throughout quantum physics to represent quantum states and their transformations. In this section we introduce the part of Dirac's notation that is used for quantum states. Section 4.1 introduces Dirac's notation for quantum transformations. Familiarity and fluency with this notation will help greatly in understanding all subsequent material; we strongly encourage readers to work the exercises at the end of this chapter.

In Dirac's notation, a *ket* such as $|x\rangle$, where x is an arbitrary label, refers to a vector representing a state of a quantum system. A vector $|v\rangle$ is a *linear combination* of vectors $|s_1\rangle, |s_2\rangle, \ldots, |s_n\rangle$ if there exist complex numbers a_i such that $|v\rangle = a_1|s_1\rangle + a_2|s_2\rangle + \cdots + a_n|s_n\rangle$.

A set of vectors S *generates* a complex vector space V if every element $|v\rangle$ of V can be written as a complex linear combination of vectors in the set: every $|v\rangle \in V$ can be written as $|v\rangle = a_1|s_1\rangle + a_2|s_2\rangle + \cdots + a_n|s_n\rangle$ for some elements $|s_i\rangle \in S$ and complex numbers a_i. Given a set of vectors S, the subspace of all linear combinations of vectors in S is called the *span* of S and is denoted span(S). A set of vectors B for which every element of V can be written *uniquely* as a linear combination of vectors in B is called a *basis* for V. In a two-dimensional vector space, any two vectors that are not multiples of each other form a basis. In quantum mechanics, bases are usually required to be *orthonormal*, a property we explain shortly. The two distinguished states, $|0\rangle$ and $|1\rangle$, are also required to be orthonormal.

An *inner product* $\langle v_2|v_1\rangle$, or *dot product*, on a complex vector space V is a complex function defined on pairs of vectors $|v_1\rangle$ and $|v_2\rangle$ in V, satisfying

- $\langle v|v\rangle$ is non-negative real,
- $\langle v_2|v_1\rangle = \overline{\langle v_1|v_2\rangle}$, and
- $(a\langle v_2| + b\langle v_3|)|v_1\rangle = a\langle v_2|v_1\rangle + b\langle v_3|v_1\rangle$,

where $\overline{z}$ is the complex conjugate $\overline{z} = a - \mathbf{i}b$ of $z = a + \mathbf{i}b$.

Two vectors $|v_1\rangle$ and $|v_2\rangle$ are said to be *orthogonal* if $\langle v_1|v_2\rangle = 0$. A set of vectors is orthogonal if all of its members are orthogonal to each other. The *length*, or norm, of a vector $|v\rangle$ is $\big||v\rangle\big| = \sqrt{\langle v|v\rangle}$. Since all vectors $|x\rangle$ representing quantum states are of unit length, $\langle x|x\rangle = 1$ for any state vector $|x\rangle$. A set of vectors is said to be *orthonormal* if all of its elements are of length one and orthogonal to each other: a set of vectors $B = \{|\beta_1\rangle, |\beta_2\rangle, \ldots, |\beta_n\rangle\}$ is orthonormal if $\langle\beta_i|\beta_j\rangle = \delta_{ij}$ for all i, j, where

$$\delta_{ij} = \begin{cases} 1 & \text{if } i = j \\ 0 & \text{otherwise.} \end{cases}$$

In quantum mechanics we are mainly concerned with bases that are orthonormal, so whenever we say *basis* we mean *orthonormal basis* unless we say otherwise.

For the state space of a two-state system to represent a quantum bit, two orthonormal distinguished states, labeled $|0\rangle$ and $|1\rangle$, must be specified. Apart from the requirement that $|0\rangle$ and $|1\rangle$ be orthonormal, the states may be chosen arbitrarily. For instance, in the case of photon polarization, we may choose $|0\rangle$ and $|1\rangle$ to correspond to the states $|\uparrow\rangle$ and $|\rightarrow\rangle$, or to $|\nearrow\rangle$ and $|\nwarrow\rangle$. We follow the convention that $|0\rangle = |\uparrow\rangle$ and $|1\rangle = |\rightarrow\rangle$, which implies that $|\nearrow\rangle = \frac{1}{\sqrt{2}}(|0\rangle + |1\rangle)$ and $|\nwarrow\rangle = \frac{1}{\sqrt{2}}(|0\rangle - |1\rangle)$. In the case of electron spin, $|0\rangle$ and $|1\rangle$ could correspond to the spin-up and spin-down states, or spin-left and spin-right. When talking about qubits, and quantum information processing in general, a *standard basis* $\{|0\rangle, |1\rangle\}$ with respect to which all statements are made must be chosen in advance and remain fixed throughout the discussion. In quantum information

processing, classical bit values of 0 and 1 will be encoded in the distinguished states $|0\rangle$ and $|1\rangle$. This encoding enables a direct comparison between bits and qubits: bits can take on only two values, 0 and 1, while qubits can take on not only the values $|0\rangle$ and $|1\rangle$ but also any superposition of these values, $a|0\rangle + b|1\rangle$, where a and b are complex numbers such that $|a|^2 + |b|^2 = 1$.

Vectors and linear transformations can be written using matrix notation once a basis has been specified. That is, if basis $\{|\beta_1\rangle, |\beta_2\rangle\}$ is specified, a ket $|v\rangle = a|\beta_1\rangle + b|\beta_2\rangle$ can be written $\begin{pmatrix} a \\ b \end{pmatrix}$; a ket $|v\rangle$ corresponds to a column vector v, where v is simply a label, a name for this vector. The conjugate transpose $v^\dagger$ of a vector

$$v = \begin{pmatrix} a_1 \\ \vdots \\ a_n \end{pmatrix} \quad \text{is} \quad v^\dagger = (\overline{a_1}, \ldots, \overline{a_n}) \ .$$

In Dirac's notation, the conjugate transpose of a ket $|v\rangle$ is called a *bra* and is written $\langle v|$, so

$$|v\rangle = \begin{pmatrix} a_1 \\ \vdots \\ a_n \end{pmatrix} \quad \text{and} \quad \langle v| = (\overline{a_1}, \ldots, \overline{a_n}) \ .$$

A bra $\langle v|$ corresponds to a row vector $v^\dagger$.

Given two complex vectors

$$|a\rangle = \begin{pmatrix} a_1 \\ \vdots \\ a_n \end{pmatrix} \quad \text{and} \quad |b\rangle = \begin{pmatrix} b_1 \\ \vdots \\ b_n \end{pmatrix} ,$$

the standard *inner product* $\langle a|b\rangle$ is defined to be the scalar obtained by multiplying the conjugate transpose $\langle a| = (\overline{a_1}, \ldots, \overline{a_n})$ with $|b\rangle$:

$$\langle a|b\rangle = \langle a||b\rangle = (\overline{a_1}, \ldots, \overline{a_n}) \begin{pmatrix} b_1 \\ \vdots \\ b_n \end{pmatrix} = \sum_{i=1}^{n} \overline{a_i} b_i .$$

When $\vec{a} = |a\rangle$ and $\vec{b} = |b\rangle$ are real vectors, this inner product is the same as the standard dot product on the n dimensional real vector space $\mathbf{R}^n$: $\langle a|b\rangle = a_1 b_1 + \cdots + a_n b_n = \vec{a} \cdot \vec{b}$. Dirac's choice of *bra* and *ket* arose as a play on words: an inner product $\langle a|b\rangle$ of a bra $\langle a|$ and a ket $|b\rangle$ is sometimes called a *bracket*. The following relations hold, where $v = a|0\rangle + b|1\rangle$: $\langle 0|0\rangle = 1$, $\langle 1|1\rangle = 1$, $\langle 1|0\rangle = \langle 0|1\rangle = 0$, $\langle 0|v\rangle = a$, and $\langle 1|v\rangle = b$.

In the standard basis, with ordering $\{|0\rangle, |1\rangle\}$, the basis elements $|0\rangle$ and $|1\rangle$ can be expressed as $\begin{pmatrix} 1 \\ 0 \end{pmatrix}$ and $\begin{pmatrix} 0 \\ 1 \end{pmatrix}$, and a complex linear combination $|v\rangle = a|0\rangle + b|1\rangle$ can be written $\begin{pmatrix} a \\ b \end{pmatrix}$.

This choice of basis and order of the basis vectors are mere convention. Representing $|0\rangle$ as $\begin{pmatrix}1\\0\end{pmatrix}$ and $|1\rangle$ as $\begin{pmatrix}0\\1\end{pmatrix}$ or representing $|0\rangle$ as $\frac{1}{\sqrt{2}}\begin{pmatrix}1\\-1\end{pmatrix}$ and $|1\rangle$ as $\frac{1}{\sqrt{2}}\begin{pmatrix}1\\1\end{pmatrix}$ would be equally good as long as it is done consistently. Unless otherwise specified, all vectors and matrices in this book will be written with respect to the standard basis $\{|0\rangle, |1\rangle\}$ in this order.

A quantum state $|v\rangle$ is a *superposition* of basis elements $\{|\beta_1\rangle, |\beta_2\rangle\}$ if it is a nontrivial linear combination of $|\beta_1\rangle$ and $|\beta_2\rangle$, if $|v\rangle = a_1|\beta_1\rangle + a_2|\beta_2\rangle$ where a_1 and a_2 are non-zero. For the term *superposition* to be meaningful, a basis must be specified. In this book, if we say "superpostion" without explicitly specifying the basis, we implicitly mean with respect to the standard basis.

Initially the vector/matrix notation will be easier for many readers to use because it is familiar. Sometimes matrix notation is convenient for performing calculations, but it always requires the choice of a basis and an ordering of that basis. The bra / ket notation has the advantage of being independent of basis and the order of the basis elements. It is also more compact and suggests correct relationships, as we saw for the inner product, so once it becomes familiar, it is easier to read and faster to use.

Instead of qubits, physical systems with states modeled by three- or n-dimensional vector spaces could be used as fundamental units of computation. Three-valued units are called *qutrits*, and n-valued units are called *qudits*. Since qudits can be modeled using multiple qubits, a model of quantum information based on qudits has the same computational power as one based on qubits. For this reason we do not consider qudits further, just as in the classical case most people use a bit-based model of information.

We now have a mathematical model with which to describe quantum bits. In addition, we need a mathematical model for measuring devices and their interaction with quantum bits.

2.3 Single-Qubit Measurement

The interaction of a polaroid with a photon illustrates key properties of any interaction between a measuring device and a quantum system. The mathematical description of the experiment can be used to model all measurements of single qubits, whatever their physical instantiation. The measurement of more complicated systems retains many of the features of single-qubit measurement: the probabilistic outcomes and the effect measurement has on the state of the system. This section considers only measurements of single-qubit systems. Chapter 4 discusses measurements of more general quantum systems.

Quantum theory postulates that any device that measures a two-state quantum system must have two preferred states whose representative vectors, $\{|u\rangle, |u^{\perp}\rangle\}$, form an orthonormal basis for the associated vector space. Measurement of a state transforms the state into one of the measuring device's associated basis vectors $|u\rangle$ or $|u^{\perp}\rangle$. The probability that the state is measured as basis vector $|u\rangle$ is the square of the magnitude of the amplitude of the component of the state in the direction of the basis vector $|u\rangle$. For example, given a device for measuring the polarization of

photons with associated basis $\{|u\rangle, |u^{\perp}\rangle\}$, the state $|v\rangle = a|u\rangle + b|u^{\perp}\rangle$ is measured as $|u\rangle$ with probability $|a|^2$ and as $|u^{\perp}\rangle$ with probability $|b|^2$.

This behavior of measurement is an axiom of quantum mechanics. It is not derivable from other physical principles; rather, it is derived from the empirical observation of experiments with measuring devices. If quantum mechanics is correct, all devices that measure single qubits must behave in this way; all have associated bases, and the measurement outcome is always one of the two basis vectors. For this reason, whenever anyone says "measure a qubit," they must specify with respect to which basis the measurement takes place. Throughout the book, if we say "measure a qubit" without further elaboration, we mean that the measurement is with respect to the standard basis $\{|0\rangle, |1\rangle\}$.

Measurement of a quantum state changes the state. If a state $|v\rangle = a|u\rangle + b|u^{\perp}\rangle$ is measured as $|u\rangle$, then the state $|v\rangle$ changes to $|u\rangle$. A second measurement with respect to the same basis will return $|u\rangle$ with probability 1. Thus, unless the original state happens to be one of the basis states, a single measurement will change that state, making it impossible to determine the original state from any sequence of measurements.

While the mathematics of measuring a qubit in the superposition state $a|0\rangle + b|1\rangle$ with respect to the standard basis is clear, measurement brings up questions as to the meaning of a superposition. To begin with, the notion of superposition is basis-dependent; all states are superpositions with respect to some bases and not with respect to others. For instance, $a|0\rangle + b|1\rangle$ is a superposition with respect to the basis $\{|0\rangle, |1\rangle\}$ but not with respect to $\{a|0\rangle + b|1\rangle, \overline{b}|0\rangle - \overline{a}|1\rangle\}$.

Also, because the result of measuring a superposition is probabilistic, some people are tempted to think of the state $|v\rangle = a|0\rangle + b|1\rangle$ as a probabilistic mixture of $|0\rangle$ and $|1\rangle$. It is not. In particular, it is not true that the state is really either $|0\rangle$ or $|1\rangle$ and that we just do not happen to know which. Rather, $|v\rangle$ is a definite state, which, when measured in certain bases, gives deterministic results, while in others it gives random results: a photon with polarization $|\nearrow\rangle = \frac{1}{\sqrt{2}}(|\uparrow\rangle + |\rightarrow\rangle)$ behaves deterministically when measured with respect to the Hadamard basis $\{|\nearrow\rangle, |\nwarrow\rangle\}$, but it gives random results when measured with respect to the standard basis $\{|\uparrow\rangle, |\rightarrow\rangle\}$. It is okay to think of a superposition $|v\rangle = a|0\rangle + b|1\rangle$ as in some sense being in both state $|0\rangle$ and state $|1\rangle$ at the same time, as long as that statement is not taken too literally: states that are combinations of $|0\rangle$ and $|1\rangle$ in similar proportions but with different amplitudes, such as $\frac{1}{\sqrt{2}}(|0\rangle + |1\rangle)$, $\frac{1}{\sqrt{2}}(|0\rangle - |1\rangle)$ and $\frac{1}{\sqrt{2}}(|0\rangle + \mathbf{i}|1\rangle)$, represent distinct states that behave differently in many situations.

Given that qubits can take on any one of infinitely many states, one might hope that a single qubit could store lots of classical information. However, the properties of quantum measurement severely restrict the amount of information that can be extracted from a qubit. Information about a quantum bit can be obtained only by measurement, and any measurement results in one of only two states, the two basis states associated with the measuring device; thus, a single measurement yields at most a single classical bit of information. Because measurement changes the state, one cannot make two measurements on the original state of a qubit. Furthermore, section 5.1.1 shows that an unknown quantum state cannot be cloned, which means it is not possible to measure a qubit's state in two ways, even indirectly by copying the qubit's state and measuring the copy.

Thus, even though a quantum bit can be in infinitely many different superposition states, it is possible to extract only a single classical bit's worth of information from a single quantum bit.

2.4 A Quantum Key Distribution Protocol

The quantum theory introduced so far is sufficient to describe a first application of quantum information processing: a key distribution protocol that relies on quantum effects for its security and for which there is no classical analog.

Keys—binary strings or numbers chosen randomly from a sufficiently large set—provide the security for most cryptographic protocols, from encryption to authentication to secret sharing. For this reason, the establishment of keys between the parties who wish to communicate is of fundamental importance in cryptography. Two general classes of keys exist: symmetric keys and public-private key pairs. Both types are used widely, often in conjunction, in a wide variety of practical settings, from secure e-commerce transactions to private communication over public networks.

Public-private key pairs consist of a public key, knowable by all, and a corresponding private key whose secrecy must be carefully guarded by the owner. Symmetric keys consist of a single key (or a pair of keys easily computable from one another) that are known to all of the legitimate parties and no one else. In the symmetric key case, multiple parties are responsible for guarding the security of the key.

Quantum key distribution protocols establish a symmetric key between two parties, who are generally known in the cryptographic community as Alice and Bob. Quantum key distribution protocols can be used securely anywhere classical key agreement protocols such as Diffie-Hellman can be used. They perform the same task; however, the security of quantum key distribution rests on fundamental properties of quantum mechanics, whereas classical key agreement protocols rely on the computational intractability of a certain problem. For example, while Diffie-Hellman remains secure against all known classical attacks, the problem on which it is based, the discrete logarithm problem, is tractable on a quantum computer. Section 8.6.1 discusses Shor's quantum algorithm for the discrete log problem.

The earliest quantum key distribution protocol is known as BB84 after its inventors, Charles Bennett and Gilles Brassard, and the year of the invention. The aim of the BB84 protocol is to establish a secret key, a random sequence of bit values 0 and 1, known only to the two parties, Alice and Bob, who may use this key to support a cryptographic task such as exchanging secret messages or detecting tampering. The BB84 protocol enables Alice and Bob to be sure that if they detect no problems while attempting to establish a key, then with high probability it is secret. The protocol does not guarantee, however, that they will succeed in establishing a private key.

Suppose Alice and Bob are connected by two public channels: an ordinary bidirectional classical channel and a unidirectional quantum channel. The quantum channel allows Alice to send a sequence of single qubits to Bob; in our case we suppose the qubits are encoded in the polarization states of individual photons. Both channels can be observed by an eavesdropper Eve. This situation

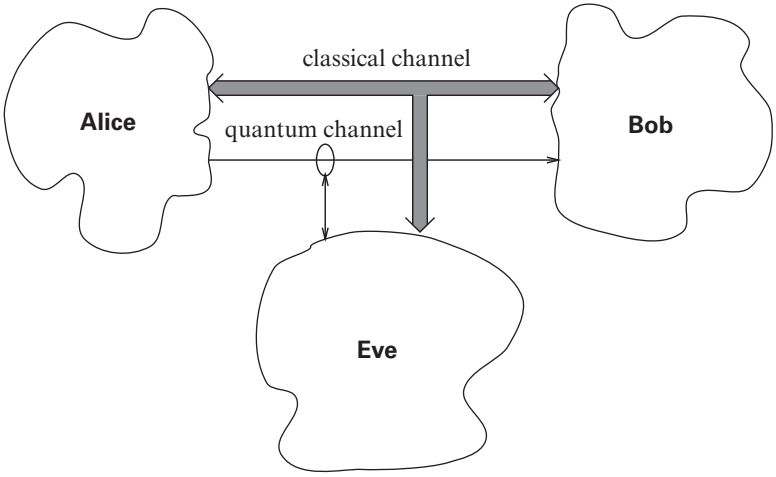

Figure 2.5
Alice and Bob wish to agree on a common key not known to Eve.

is illustrated in figure 2.5. To begin the process of establishing a private key, Alice uses quantum or classical means to generate a random sequence of classical bit values. As we will see, a random subset of this sequence will be the final private key. Alice then randomly encodes each bit of this sequence in the polarization state of a photon by randomly choosing for each bit one of the following two agreed-upon bases in which to encode it: the standard basis,

$$0 \rightarrow |\uparrow\rangle$$

$$1 \rightarrow |\rightarrow\rangle,$$

or the Hadamard basis,

$$0 \rightarrow |\nearrow\rangle = \tfrac{1}{\sqrt{2}}(|\uparrow\rangle + |\rightarrow\rangle)$$
$$1 \rightarrow |\nwarrow\rangle = \tfrac{1}{\sqrt{2}}(|\uparrow\rangle - |\rightarrow\rangle).$$

She sends this sequence of photons to Bob through the quantum channel.

Bob measures the state of each photon he receives by randomly picking either basis. Over the classical channel, Alice and Bob check that Bob has received a photon for every one Alice has sent, and only then do Alice and Bob tell each other the bases they used for encoding and decoding (measuring) each bit. When the choice of bases agree, Bob's measured bit value agrees with the bit value that Alice sent. When they chose different bases, the chance that Bob's bit matches Alice's is only 50 percent. Without revealing the bit values themselves, which would also reveal the values to Eve, there is no way for Alice and Bob to figure out which of these bit values agree and which do not. So they simply discard all the bits on which their choice of bases differed. An average of 50 percent of all bits transmitted remain. Then, depending on the level of

assurance they require, Alice and Bob compare a certain number of bit values to check that no eavesdropping has occurred. These bits will also be discarded, and only the remaining bits will be used as their private key.

We describe one sort of attack that Eve can make and how quantum aspects of this protocol guard against it. On the classical channel, Alice and Bob discuss only the choice of bases and not the bit values themselves, so Eve cannot gain any information about the key from listening to the classical channel alone. To gain information, Eve must intercept the photons transmitted by Alice through the quantum channel. Eve must send photons to Bob before knowing the choice of bases made by Alice and Bob, because they compare bases only after Bob has confirmed receipt of the photons. If she sends different photons to Bob, Alice and Bob will detect that something is wrong when they compare bit values, but if she sends the original photons to Bob without doing anything, she gains no information.

To gain information, Eve makes a measurement before sending the photons to Bob. Instead of using a polaroid to measure, she can use a calcite crystal and a photon detector; a beam of light passing through a calcite crystal is split into two spatially separated beams, one polarized in the direction of the crystal's optic axis and the other polarized in the direction perpendicular to the optic axis. A photon detector placed in one of the beams performs a quantum measurement: the probability with which a photon ends up in one of the beams can be calculated just as described in section 2.3.

Since Alice has not yet told Bob her sequence of bases, Eve does not know in which basis to measure each bit. If she randomly measures the bits, she will measure using the wrong basis approximately half of the time. (Exercise 2.10 examines the case in which Eve does not even know which two bases to choose from.) When she uses the wrong basis to measure, the measurement changes the polarization of the photon before it is resent to Bob. This change in the polarization means that, even if Bob measures the photon in the same basis as Alice used to encode the bit, he will get the correct bit value only half the time.

Overall, for each of the qubits Alice and Bob retain, if the qubit was measured by Eve before she sent it to Bob, there will be a 25 percent chance that Bob measures a different bit value than the one Alice sent. Thus, this attack on the quantum channel is bound to introduce a high error rate that Alice and Bob detect by comparing a sufficient number of bits over the classical channel. If these bits agree, they can confidently use the remaining bits as their private key. So, not only is it likely that 25 percent of Eve's version of the key is incorrect, but the fact that someone is eavesdropping can be detected by Alice and Bob. Thus Alice and Bob run little risk of establishing a compromised key; either they succeed in creating a private key or they detect that eavesdropping has taken place.

Eve does not know in which basis to measure the qubits, a property crucial to the security of this protocol, because Alice and Bob share information about which bases they used only after Bob has received the photons; if Eve knew in which basis to measure the photons, her measurements would not change the state, and she could obtain the bit values without Bob and Alice noticing anything suspicious. A seemingly easy way for Eve to overcome this obstacle is for her to copy the qubit, keeping a copy for herself while sending the original on to Bob. Then she can measure her copy

later after learning the correct basis from listening in on the classical channel. Such a protocol is defeated by an important property of quantum information. As we will show in section 5.1.1, the no-cloning principle of quantum mechanics means that it is impossible to reliably copy quantum information unless a basis in which it is encoded is known; all quantum copying machines are basis dependent. Copying with the wrong machine not only does not produce an accurate copy, but it also changes the original in much the same way measuring in the wrong basis does. So Bob and Alice would detect attempts to copy with high probability.

The security of this protocol, like other pure key distribution protocols such as Diffie-Hellman, is vulnerable to a *man-in-the-middle attack* in which Eve impersonates Bob to Alice and impersonates Alice to Bob. To guard against such an attack, Alice and Bob need to combine it with an authentication protocol, be it recognizing each other's voices or a more mathematical authentication protocol.

More sophisticated versions of this protocol exist that support quantum key distribution through noisy channels and stronger guarantees about the amount of information Eve can gain. In the noisy case, Eve is able to gain some information initially, but techniques of quantum error correction and privacy amplification can reduce the amount of information Eve gains to arbitrarily low levels as well as compensate for the noise in the channels.

2.5 The State Space of a Single-Qubit System

The *state space* of a classical or quantum physical system is the set of all possible states of the system. Depending on which properties of the system are under consideration, a state of the system consists of any combination of the positions, momenta, polarizations, spins, energy, and so on of the particles in the system. When we are considering only polarization states of a single photon, the state space is all possible polarizations. More generally, the state space for a single qubit, no matter how it is realized, is the set of possible qubit values,

$$\{a|0\rangle + b|1\rangle\},$$

where $|a|^2 + |b|^2 = 1$ and $a|0\rangle + b|1\rangle$ and $a'|0\rangle + b'|1\rangle$ are considered the same qubit value if $a|0\rangle + b|1\rangle = c(a'|0\rangle + b'|1\rangle)$ for some modulus one complex number c.

2.5.1 Relative Phases versus Global Phases

That the same quantum state is represented by more than one vector means that there is a critical distinction between the complex vector space in which we write our qubit values and the quantum state space itself. We have reduced the ambiguity by requiring that vectors representing quantum states be unit vectors, but some ambiguity remains: unit vectors equivalent up to multiplication by a complex number of modulus one represent the same state. The multiple by which two vectors representing the same quantum state differ is called the *global phase* and has no physical meaning. We use the equivalence relation $|v\rangle \sim |v'\rangle$ to indicate that $|v\rangle = c|v'\rangle$ for some complex global phase $c = e^{\mathrm{i}\phi}$. The space in which two two-dimensional complex vectors are considered equivalent if they are multiples of each other is called *complex projective space* of dimension one.

This *quotient space*, a space obtained by identifying sets of equivalent vectors with a single point in the space, is expressed with the compact notation used for quotient spaces:

$$\mathbf{CP}^1 = \{a|0\rangle + b|1\rangle\}/\sim .$$

So the quantum state space for a single-qubit system is in one-to-one correspondence with the points of the complex projective space $\mathbf{CP}^1$. We will make no further use of $\mathbf{CP}^1$ in this book, but it is used in the quantum information processing literature.

Because the linearity of vector spaces makes them easier to work with than projective spaces (we know how to add vectors and there is no corresponding way of adding points in projective spaces), we generally perform all calculations in the vector space corresponding to the quantum state space. The multiplicity of representations of a single quantum state in this vector space representation, however, is a common source of confusion for newcomers to the field.

A physically important quantity is the *relative phase* of a single-qubit state $a|0\rangle + b|1\rangle$. The relative phase (in the standard basis) of a superposition $a|0\rangle + b|1\rangle$ is a measure of the angle in the complex plane between the two complex numbers a and b. More precisely, the relative phase is the modulus one complex number $e^{\mathbf{i}\phi}$ satisfying $a/b = e^{\mathbf{i}\phi}|a|/|b|$. Two superpositions $a|0\rangle + b|1\rangle$ and $a'|0\rangle + b'|1\rangle$ whose amplitudes have the same magnitudes but that differ in a relative phase represent different states.

The physically meaningful relative phase and the physically meaningless global phase should not be confused. While multiplication with a unit constant does not change a quantum state vector, relative phases in a superposition do represent distinct quantum states: even though $|v_1\rangle \sim e^{\mathbf{i}\phi}|v_1\rangle$, the vectors $\frac{1}{\sqrt{2}}(e^{\mathbf{i}\phi}|v_1\rangle + |v_2\rangle)$ and $\frac{1}{\sqrt{2}}(|v_1\rangle + |v_2\rangle)$ do *not* represent the same state. We must always be cognizant of the $\sim$ equivalence when we interpret the results of our computations as quantum states.

A few single-qubit states will be referred to often enough that we give them special labels:

$$|+\rangle = 1/\sqrt{2}(|0\rangle + |1\rangle) \tag{2.1}$$

$$|-\rangle = 1/\sqrt{2}(|0\rangle - |1\rangle) \tag{2.2}$$

$$|\mathbf{i}\rangle = 1/\sqrt{2}(|0\rangle + \mathbf{i}|1\rangle) \tag{2.3}$$

$$|-\mathbf{i}\rangle = 1/\sqrt{2}(|0\rangle - \mathbf{i}|1\rangle). \tag{2.4}$$

The basis $\{|+\rangle, |-\rangle\}$ is referred to as the Hadamard basis. We sometimes use the notation $\{|\nwarrow\rangle, |\nearrow\rangle\}$ for the Hadamard basis when discussing photon polarization.

Some authors omit normalization factors, allowing vectors of any length to represent a state where two vectors represent the same state if they differ by any complex factor. We will explicitly write the normalizations factors, both because then the amplitudes have a more direct relation to the measurement probabilities and because keeping track of the normalization factor provides a check that helps avoid errors.

2.5.2 Geometric Views of the State Space of a Single Qubit

While we primarily use vectors to represent quantum states, it is helpful to have models of the single-qubit state space in which there is a one-to-one correspondence between states and points in the space. We give two related but different geometric models with this property. The second of these, the Bloch sphere model, will be used in section 5.4.1 to illustrate single-qubit quantum transformations, and in chapter 10 it will be generalized to aid in the discussion of single-qubit subsystems. These models are just different ways of looking at complex projective space of dimension 1. As we will see, complex projective space of dimension 1 can be viewed as a sphere. First we show that it can be viewed as the extended complex plane, the complex plane $\mathbf{C}$ together with an additional point traditionally labeled ∞.

Extended Complex Plane $\mathbf{C} \cup \{\infty\}$ A correspondence between the set of all complex numbers and single-qubit states is given by

$$a|0\rangle + b|1\rangle \mapsto b/a = \alpha$$

and its inverse

$$\alpha \mapsto \frac{1}{\sqrt{1+|\alpha|^2}}|0\rangle + \frac{\alpha}{\sqrt{1+|\alpha|^2}}|1\rangle.$$

The preceding mapping is not defined for the state with $a = 0$ and $b = 1$. To make this correspondence one-to-one we need to add a single point, which we label ∞, to the complex plane and define $\infty \leftrightarrow |1\rangle$. For example, we have

$$\begin{aligned}
|0\rangle &\mapsto 0\\
|1\rangle &\mapsto \infty\\
|+\rangle &\mapsto +1\\
|-\rangle &\mapsto -1\\
|\mathbf{i}\rangle &\mapsto \mathbf{i}\\
|-\mathbf{i}\rangle &\mapsto -\mathbf{i}.
\end{aligned}$$

We now describe another useful model, related to but different from the previous one.

Bloch Sphere Starting with the previous representation, we can map each state, represented by the complex number $\alpha = s + \mathbf{i}t$, onto the unit sphere in three real dimensions, the points $(x, y, z) \in \mathbf{C}$ satisfying $|x|^2 + |y|^2 + |z|^2 = 1$, via the standard *stereographic projection*

$$(s, t) \mapsto \left(\frac{2s}{|\alpha|^2+1}, \frac{2t}{|\alpha|^2+1}, \frac{1-|\alpha|^2}{|\alpha|^2+1}\right),$$

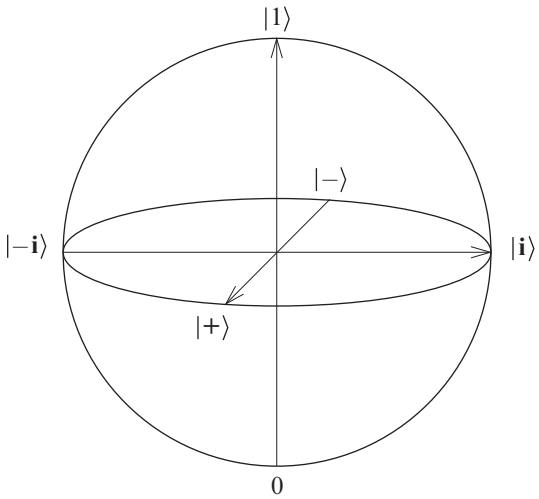

Figure 2.6
Location of certain single-qubit states on the surface of the Bloch sphere.

further requiring that $\infty \mapsto (0, 0, -1)$. Figure 2.6 illustrates the following correspondences:

$|0\rangle \mapsto (0, 0, 1)$

$|1\rangle \mapsto (0, 0, -1)$

$|+\rangle \mapsto (1, 0, 0)$

$|-\rangle \mapsto (-1, 0, 0)$

$|\mathbf{i}\rangle \mapsto (0, 1, 0)$

$|-\mathbf{i}\rangle \mapsto (0, -1, 0)$.

We have given three representations of the quantum state space for a single-qubit system.

1. Vectors written in ket notation: $a|0\rangle + b|1\rangle$ with complex coefficients a and b, subject to $|a|^2 + |b|^2 = 1$, where a and b are unique up to a unit complex factor. Because of this factor, the global phase, this representation is not one-to-one.

2. Extended complex plane: a single complex number $\alpha \in \mathbf{C}$ or ∞. This representation is one-to-one.

3. Bloch sphere: points (x, y, z) on the unit sphere. This representation is also one-to-one.

As we will see in section 10.1, the points in the interior of the sphere also have meaning for quantum information processing. For historical reasons, the entire ball, including the interior, is called the Bloch sphere, instead of just the states on the surface, which truly form a sphere. For

this reason, we refer to the state space of a single-qubit system as the surface of the Bloch sphere (figure 2.6).

One of the advantages of the Bloch sphere representation is that it is easy to read off all possible bases from the model; orthogonal states correspond to antipodal points of the Bloch sphere. In particular, every diameter of the Bloch sphere corresponds to a basis for the single-qubit state space.

The illustration we gave in figure 2.4 differs from the Bloch sphere representation of single-qubit quantum states in that the angles are half that of those in the Bloch sphere representation: in particular, the angle between two states in figure 2.4 has the usual relation to the inner product, whereas in the Bloch sphere representation the angle is twice that of the angle in the inner product formula.

2.5.3 Comments on General Quantum State Spaces

The states of all quantum systems satisfy certain properties that are encapsulated by a linear differential equation called the Schrödinger wave equation. For this reason, solutions to the Schrödinger equation are called wave functions, so all quantum states have representations as wave functions. For the theory of quantum information processing, we do not need to concern ourselves with properties specific to any of the various possible physical realizations of quantum bits, so we do not need to look at the details of specific wave function solutions; we can simply view wave functions as abstract vectors which we will denote by kets such as $|\rightarrow\rangle$ or $|0\rangle$.

Since the Schrödinger equation is linear, the addition of two solutions to the Schrödinger equation or a constant multiple of a solution of the Schrödinger equation are also solutions to the Schrödinger equation. Thus, the set of solutions to the Schrödinger equation for any quantum system is a complex vector space. Furthermore, the set of solutions has a natural inner product. For the theoretical aspects of quantum information processing, considering only finite dimensional vector spaces usually suffices. We simply mention that, in the infinite dimensional case, the space of solutions satisfies the conditions needed to form a *Hilbert space*. Hilbert spaces are frequently mentioned in the literature, since they are the most general case, but in most papers on quantum information processing, the Hilbert spaces discussed are finite-dimensional, in which case they are nothing more or less than finite-dimensional complex vector spaces. We discuss the state spaces of multiple-qubit systems in chapter 3. Just as in the single-qubit case, there is redundancy in this model. In fact, there is greater redundancy in the vector space representation of larger quantum systems, which leads to a significantly more complicated geometry.

2.6 References

The early essays of Feynman and Manin can be found in [119, 120, 121] and [202, 203] respectively. The bra / ket notation was first introduced by Dirac in 1958 [103]. It is found in most quantum mechanics textbooks and is used in virtually all papers on quantum computing.

More information about linear algebra, in particular proofs of facts stated here, can be found in any linear algebra text, including Strang's *Linear Algebra and Its Applications* [265] and Hoffman and Kunze's *Linear Algebra* [152], or in a book on mathematics for physicists such as Bamberg and Sternberg's *A Course in Mathematics for Students of Physics* [30].

The BB84 quantum key distribution protocol was developed by Charles Bennett and Gilles Brassard [42, 43, 45] building on work of Stephen Wiesner [284]. A related protocol was shown to be unconditionally secure by Lo and Chau [198]. Their proof was later simplified by Shor and Preskill [255] and extended to BB84. Another proof was given by Mayers [206]. The BB84 protocol was first demonstrated experimentally by Bennett et al. in 1992 over 30 cm of free space [37]. Since then, several groups have demonstrated this protocol and other quantum key distribution protocols over 100 km of fiber optic cable. Bienfang et al. [51] demonstrated quantum key distribution over 23 km of free space at night, and Hughes et al. have achieved distances of 10 km through free space in daylight [156]. See the ARDA roadmap [157], the QIPC strategic report [295], and Gisin et al. [130] for detailed overviews of implementation efforts and the challenges involved. The companies id Quantique, MagiQ, and SmartQuantum currently sell quantum cryptographic systems implementing the BB84 protocol. Other quantum key distribution protocols exist. Exercise 2.11 develops the B92 protocol, and section 3.4 describes Ekert's entanglement-based quantum key distribution protocol.

While we explain all quantum mechanics needed for the topics covered in this book, the reader may be interested in books on quantum mechanics. Countless books on quantum mechanics are available. Greenstein and Zajonc [140] give a readable high-level exposition of quantum mechanics, including descriptions of many experiments. The third volume of the *Feynman Lectures on Physics* [122] is accessible to a large audience. A classical explanation of the polarization experiment is given in the first volume. Shankar's textbook [247] defines much more of the notation and mathematics required for performing calculations than do the previously mentioned books, and it is quite readable as well. Other textbooks, such as Liboff [194], may be more appropriate for readers with a physics background.

2.7 Exercises

Exercise 2.1. Let the direction $|v\rangle$ of polaroid B's preferred axis be given as a function of θ, $|v\rangle = \cos\theta|\rightarrow\rangle + \sin\theta|\uparrow\rangle$, and suppose that the polaroids A and C remain horizontally and vertically polarized as in the experiment of Section 2.1.1. What fraction of photons reach the screen? Assume that each photon generated by the laser pointer has random polarization.

Exercise 2.2. Which pairs of expressions for quantum states represent the same state? For those pairs that represent different states, describe a measurement for which the probabilities of the two outcomes differ for the two states and give these probabilities.

a. $|0\rangle$ and $-|0\rangle$

b. $|1\rangle$ and $\mathbf{i}|1\rangle$

c. $\frac{1}{\sqrt{2}}(|0\rangle + |1\rangle)$ and $\frac{1}{\sqrt{2}}(-|0\rangle + \mathbf{i}|1\rangle)$

d. $\frac{1}{\sqrt{2}}(|0\rangle + |1\rangle)$ and $\frac{1}{\sqrt{2}}(|0\rangle - |1\rangle)$

e. $\frac{1}{\sqrt{2}}(|0\rangle - |1\rangle)$ and $\frac{1}{\sqrt{2}}(|1\rangle - |0\rangle)$

f. $\frac{1}{\sqrt{2}}(|0\rangle + \mathbf{i}|1\rangle)$ and $\frac{1}{\sqrt{2}}(\mathbf{i}|1\rangle - |0\rangle)$

g. $\frac{1}{\sqrt{2}}(|+\rangle + |-\rangle)$ and $|0\rangle$

h. $\frac{1}{\sqrt{2}}(|\mathbf{i}\rangle - |-\mathbf{i}\rangle)$ and $|1\rangle$

i. $\frac{1}{\sqrt{2}}(|\mathbf{i}\rangle + |-\mathbf{i}\rangle)$ and $\frac{1}{\sqrt{2}}(|-\rangle + |+\rangle)$

j. $\frac{1}{\sqrt{2}}\left(|0\rangle + e^{\mathbf{i}\pi/4}|1\rangle\right)$ and $\frac{1}{\sqrt{2}}\left(e^{-\mathbf{i}\pi/4}|0\rangle + |1\rangle\right)$

Exercise 2.3. Which states are superpositions with respect to the standard basis, and which are not? For each state that is a superposition, give a basis with respect to which it is not a superposition.

a. $|+\rangle$

b. $\frac{1}{\sqrt{2}}(|+\rangle + |-\rangle)$

c. $\frac{1}{\sqrt{2}}(|+\rangle - |-\rangle)$

d. $\frac{\sqrt{3}}{2}|+\rangle - \frac{1}{2}|-\rangle)$

e. $\frac{1}{\sqrt{2}}(|\mathbf{i}\rangle - |-\mathbf{i}\rangle)$

f. $\frac{1}{\sqrt{2}}(|0\rangle - |1\rangle)$

Exercise 2.4. Which of the states in 2.3 are superpositions with respect to the Hadamard basis, and which are not?

Exercise 2.5. Give the set of all values of θ for which the following pairs of states are equivalent.

a. $|1\rangle$ and $\frac{1}{\sqrt{2}}\left(|+\rangle + e^{\mathbf{i}\theta}|-\rangle\right)$

b. $\frac{1}{\sqrt{2}}\left(|\mathbf{i}\rangle + e^{\mathbf{i}\theta}|-\mathbf{i}\rangle\right)$ and $\frac{1}{\sqrt{2}}\left(|-\mathbf{i}\rangle + e^{-\mathbf{i}\theta}|\mathbf{i}\rangle\right)$

c. $\frac{1}{2}|0\rangle - \frac{\sqrt{3}}{2}|1\rangle$ and $e^{\mathbf{i}\theta}\left(\frac{1}{2}|0\rangle - \frac{\sqrt{3}}{2}|1\rangle\right)$

Exercise 2.6. For each pair consisting of a state and a measurement basis, describe the possible measurement outcomes and give the probability for each outcome.

a. $\frac{\sqrt{3}}{2}|0\rangle - \frac{1}{2}|1\rangle$, $\{|0\rangle, |1\rangle\}$

b. $\frac{\sqrt{3}}{2}|1\rangle - \frac{1}{2}|0\rangle$, $\{|0\rangle, |1\rangle\}$

c. $|-\mathbf{i}\rangle$, $\{|0\rangle, |1\rangle\}$

d. $|0\rangle$, $\{|+\rangle, |-\rangle\}$

e. $\frac{1}{\sqrt{2}}(|0\rangle - |1\rangle)$, $\{|\mathbf{i}\rangle, |-\mathbf{i}\rangle\}$

f. $|1\rangle$, $\{|\mathbf{i}\rangle, |-\mathbf{i}\rangle\}$

g. $|+\rangle$, $\{\frac{1}{2}|0\rangle + \frac{\sqrt{3}}{2}|1\rangle, \frac{\sqrt{3}}{2}|0\rangle - \frac{1}{2}|1\rangle\}$

Exercise 2.7. For each of the following states, describe all orthonormal bases that include that state.

a. $\frac{1}{\sqrt{2}}(|0\rangle + \mathbf{i}|1\rangle)$

b. $\frac{1+\mathbf{i}}{2}|0\rangle - \frac{1-\mathbf{i}}{2}|1\rangle$

c. $\frac{1}{\sqrt{2}}\left(|0\rangle + e^{\mathbf{i}\pi/6}|1\rangle\right)$

d. $\frac{1}{2}|+\rangle - \frac{\mathbf{i}\sqrt{3}}{2}|-\rangle$

Exercise 2.8. Alice is confused. She understands that $|1\rangle$ and $-|1\rangle$ represent the same state. But she does not understand why that does not imply that $\frac{1}{\sqrt{2}}(|0\rangle + |1\rangle)$ and $\frac{1}{\sqrt{2}}(|0\rangle - |1\rangle)$ would be the same state. Can you help her out?

Exercise 2.9. In the BB84 protocol, how many bits do Alice and Bob need to compare to have a 90 percent chance of detecting Eve's presence?

Exercise 2.10. Analyze Eve's success in eavesdropping on the BB84 protocol if she does not even know which two bases to choose from and so chooses a basis at random at each step.

a. On average, what percentage of bit values of the final key will Eve know for sure after listening to Alice and Bob's conversation on the public channel?

b. On average, what percentage of bits in her string are correct?

c. How many bits do Alice and Bob need to compare to have a 90 percent chance of detecting Eve's presence?

Exercise 2.11. *B92 quantum key distribution protocol*. In 1992 Bennett proposed the following quantum key distribution protocol. Instead of encoding each bit in either the standard basis or the Hadamard basis as is done in the BB84 protocol, Alice encodes her random string x as follows

$$0 \mapsto |0\rangle$$
$$1 \mapsto |+\rangle = \frac{1}{\sqrt{2}}(|0\rangle + |1\rangle)$$

and sends them to Bob. Bob generates a random bit string y. If $y_i = 0$ he measures the i th qubit in the Hadamard basis $\{|+\rangle, |-\rangle\}$, if $y_i = 1$ he measures in the standard basis $\{|0\rangle, |1\rangle\}$. In this protocol, instead of telling Alice over the public classical channel which basis he used to measure

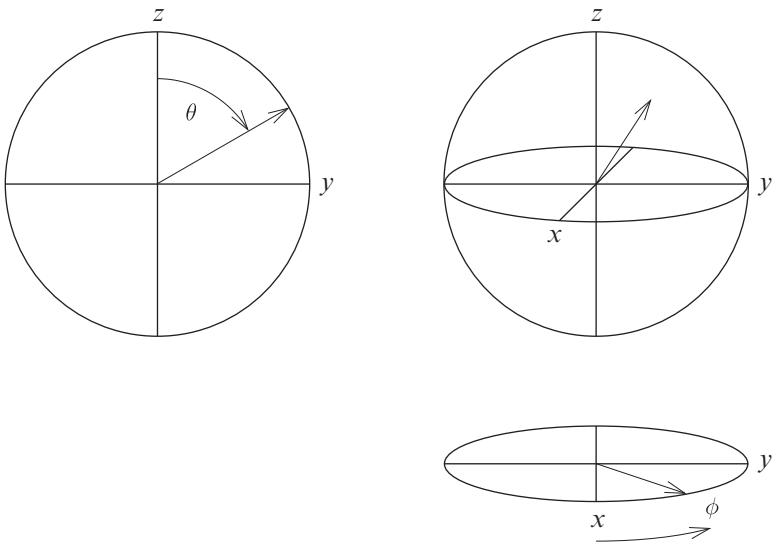

Figure 2.7
Bloch sphere representation of single-qubit quantum states.

each qubit, he tells her the results of his measurements. If his measurement resulted in $|+\rangle$ or $|0\rangle$ Bob sends 0; if his measurement indicates the state is $|1\rangle$ or $|-\rangle$, he sends 1. Alice and Bob discard all bits from strings x and y for which Bob's bit value from measurement yielded 0, obtaining strings x' and y'. Alice uses x' as the secret key and Bob uses y'. Then, depending on the security level they desire, they compare a number of bits to detect tampering. They discard these check bits from their key.

a. Show that if Bob receives exactly the states Alice sends, then the strings x' and y' are identical strings.

b. Why didn't Alice and Bob decide to keep the bits of x and y for which Bob's bit value from measurement was 0?

c. What if an eavesdropper Eve measures each bit in either the standard basis or the Hadamard basis to obtain a bit string z and forwards the measured qubits to Bob? On average, how many bits of Alice and Bob's key does she know for sure after listening in on the public classical? If Alice and Bob compare s bit values of their strings x' and y', how likely are they to detect Eve's presence?

Exercise 2.12. *Bloch Sphere: Spherical coordinates:*

a. Show that the surface of the Bloch sphere can be parametrized in terms of two real-valued parameters, the angles θ and ϕ illustrated in figure 2.7. Make sure your parametrization is in one-to-one correspondence with points on the sphere, and therefore single-qubit quantum states, in the range $\theta \in [0, \pi]$ and $\phi \in [0, 2\pi]$ except for the points corresponding to $|0\rangle$ and $|1\rangle$.

b. What are θ and ϕ for each of the states $|+\rangle$, $|-\rangle$, $|\mathbf{i}\rangle$, and $|-\mathbf{i}\rangle$?

Exercise 2.13. Relate the four parametrizations of the state space of a single qubit to each other: Give formulas for

a. vectors in ket notation

b. elements of the extended complex plane

c. spherical coordinates for the Bloch sphere (see exercise 2.12)

in terms of the x, y, and z coordinates of the Bloch sphere.

Exercise 2.14.

a. Show that antipodal points on the surface of the Block sphere represent orthogonal states.

b. Show that any two orthogonal states correspond to antipodal points.