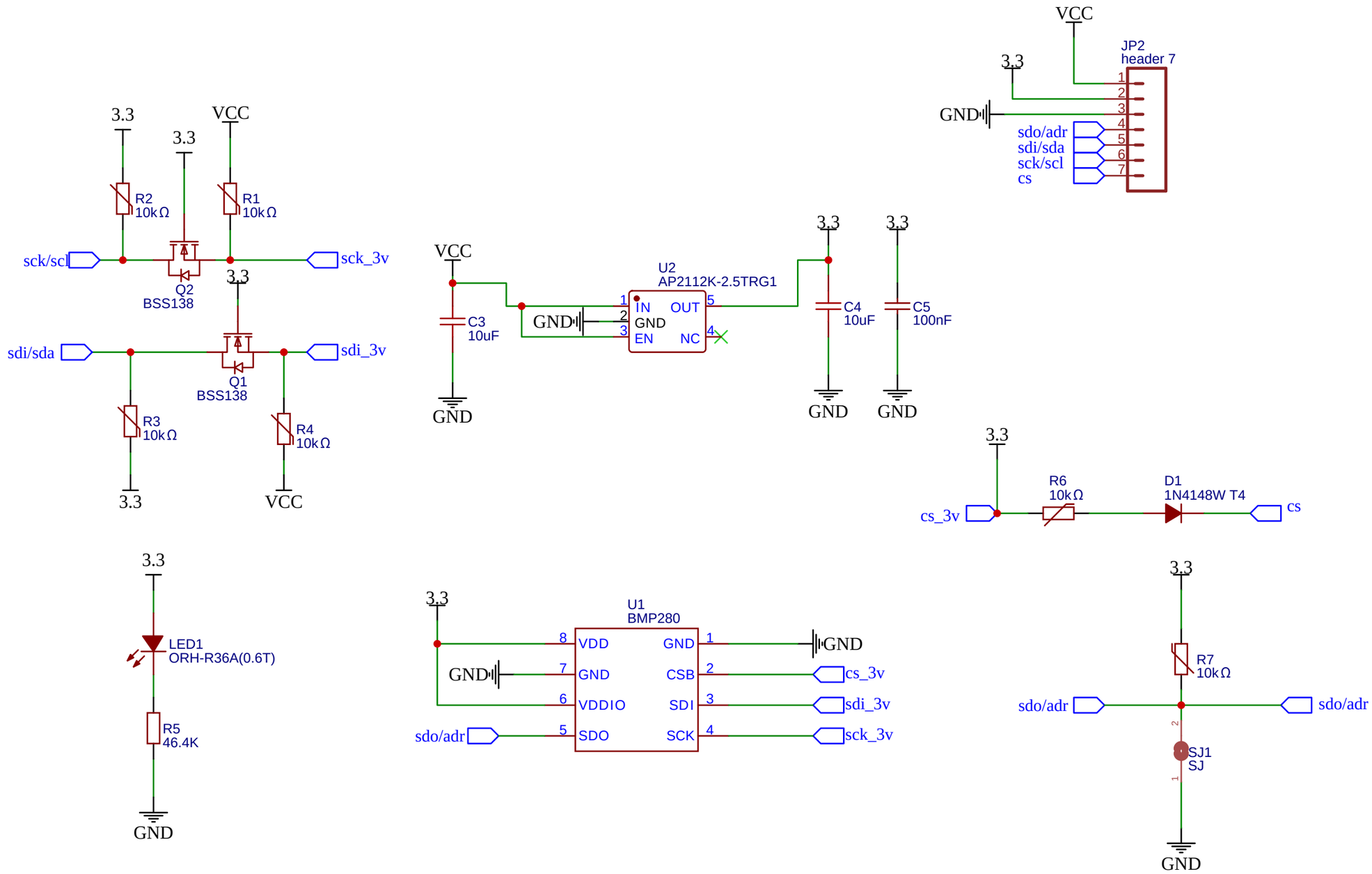

TITLE: Sheet_1	REV: 1.0
Company: waffle360	Sheet: 1/1
Date: 2021-02-06 Drawn By: xo13	