# Assignment 3

นายจิณณวัตร โพธิ์ศรีทอง 673380263-2 sec2

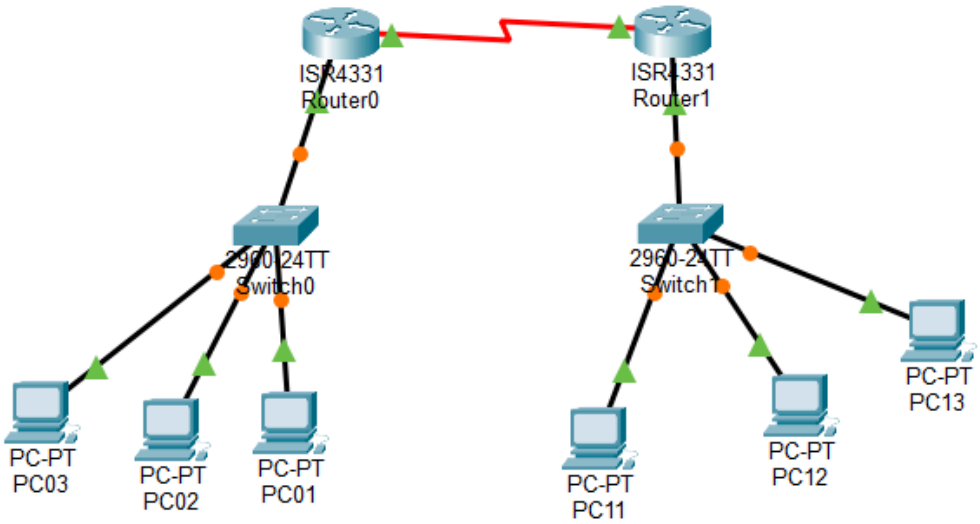


## 1. ตั้งค่า IP Addressing ของแต่ละอุปกรณ์ ดังนี้

***Router***

*Router0 GE0/0/0 -> IP : 192.168.0.1*
*-> Subnet : 255.255.255.0*

*S0/1/0 -> IP : 202.28.94.1*
*-> Subnet : 255.255.255.0*

*Router1 GE0/0/0 -> IP :192.168.1.1*
*-> Subnet : 255.255.255.0*

*S0/1/0 -> IP : 202.28.94.2*
*-> Subnet : 255.255.255.0*

***Switch ไม่ต้องตั้งค่า***

***PC***

*PC01 Gateway : 192.168.0.1*
*IP : 192.168.0.2*
*Subnet : 255.255.255.0*

*PC02 Gateway : 192.168.0.1*
*IP : 192.168.0.3*
*Subnet : 255.255.255.0*

*PC03 Gateway : 192.168.0.1*
*IP : 192.168.0.4*
*Subnet : 255.255.255.0*

*PC11 Gateway : 192.168.0.2*
*IP : 192.168.1.2*
*Subnet : 255.255.255.0*

*PC12 Gateway : 192.168.0.2*
*IP : 192.168.1.3*
*Subnet : 255.255.255.0*

*PC13 Gateway : 192.168.0.2*
*IP : 192.168.1.4*
*Subnet : 255.255.255.0*

## 2. ตั้งค่า Static Routes ของ Router แต่ละตัว

*Router0(ซ้าย) route 192.168.1.0/24 ไปที่ 202.28.94.2*

*Router1(ขวา) route 192.168.0.0/24 ไปที่ 202.28.94.1*

**3.ทดสอบ**

*PC01 -> PC11*

*PC01 -> PC12*

*PC01 -> PC13*

*จามลำดับ*

Command Prompt

```
C:\>ping 192.168.1.4

Pinging 192.168.1.4 with 32 bytes of data:

Reply from 192.168.1.4: bytes=32 time=2ms TTL=126
Reply from 192.168.1.4: bytes=32 time=1ms TTL=126
Reply from 192.168.1.4: bytes=32 time=2ms TTL=126
Reply from 192.168.1.4: bytes=32 time=1ms TTL=126

Ping statistics for 192.168.1.4:
    Packets: Sent = 4, Received = 4, Lost = 0 (0% loss),
Approximate round trip times in milli-seconds:
    Minimum = 1ms, Maximum = 2ms, Average = 1ms

C:\>ping 192.168.1.3

Pinging 192.168.1.3 with 32 bytes of data:

Reply from 192.168.1.3: bytes=32 time=6ms TTL=126
Reply from 192.168.1.3: bytes=32 time=5ms TTL=126
Reply from 192.168.1.3: bytes=32 time=5ms TTL=126
Reply from 192.168.1.3: bytes=32 time=5ms TTL=126

Ping statistics for 192.168.1.3:
    Packets: Sent = 4, Received = 4, Lost = 0 (0% loss),
Approximate round trip times in milli-seconds:
    Minimum = 5ms, Maximum = 6ms, Average = 5ms

C:\>ping 192.168.1.2

Pinging 192.168.1.2 with 32 bytes of data:

Reply from 192.168.1.2: bytes=32 time=8ms TTL=126
Reply from 192.168.1.2: bytes=32 time=5ms TTL=126
Reply from 192.168.1.2: bytes=32 time=1ms TTL=126
Reply from 192.168.1.2: bytes=32 time=5ms TTL=126

Ping statistics for 192.168.1.2:
    Packets: Sent = 4, Received = 4, Lost = 0 (0% loss),
Approximate round trip times in milli-seconds:
    Minimum = 1ms, Maximum = 8ms, Average = 4ms
```

***Successful reply***