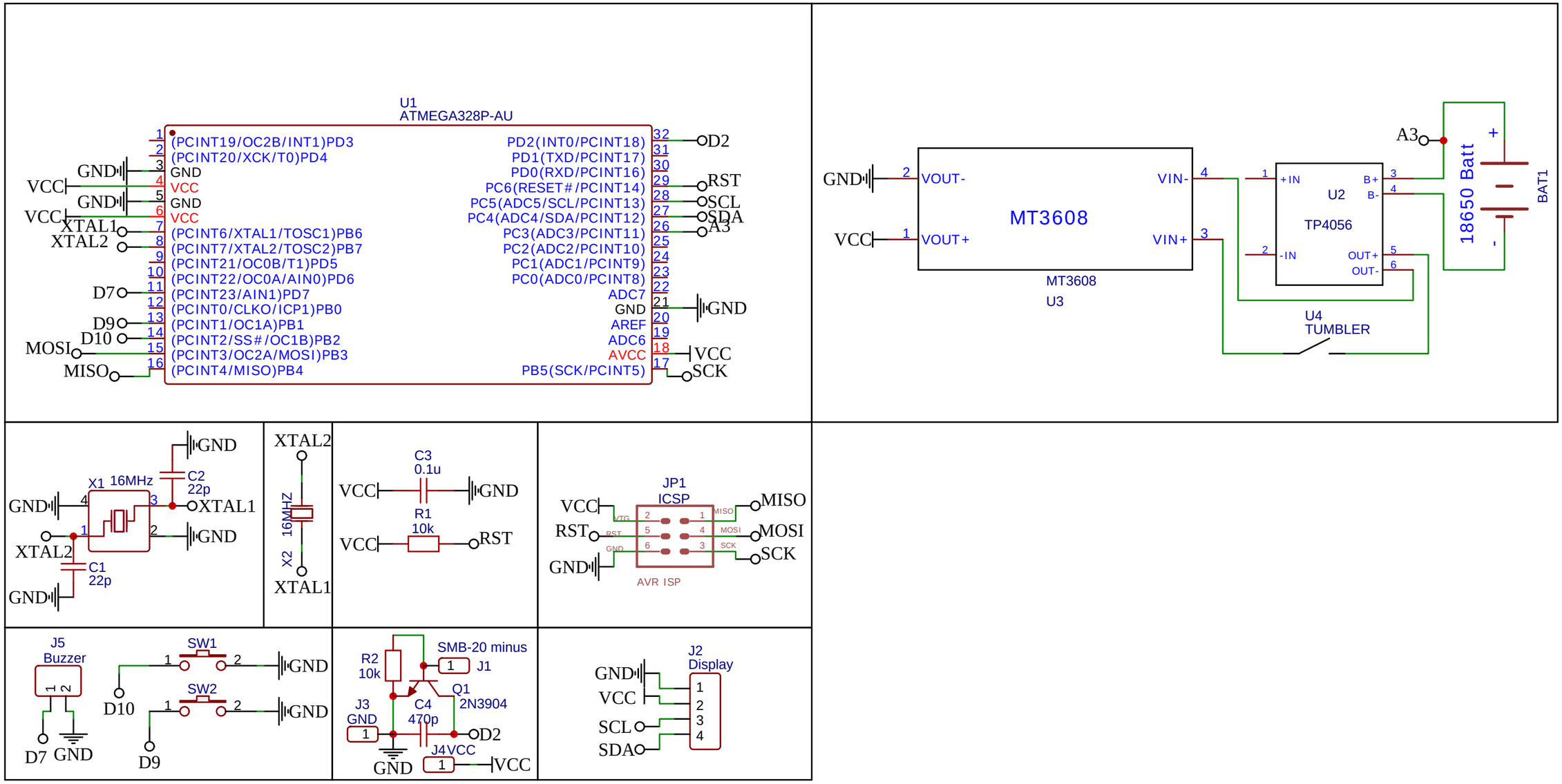

TITLE: Sheet_1		REV: 1.0
EasyEDA	Company: Your Company	Sheet: 1/1
	Date: 2021-10-07 Drawn By: MarkWain	

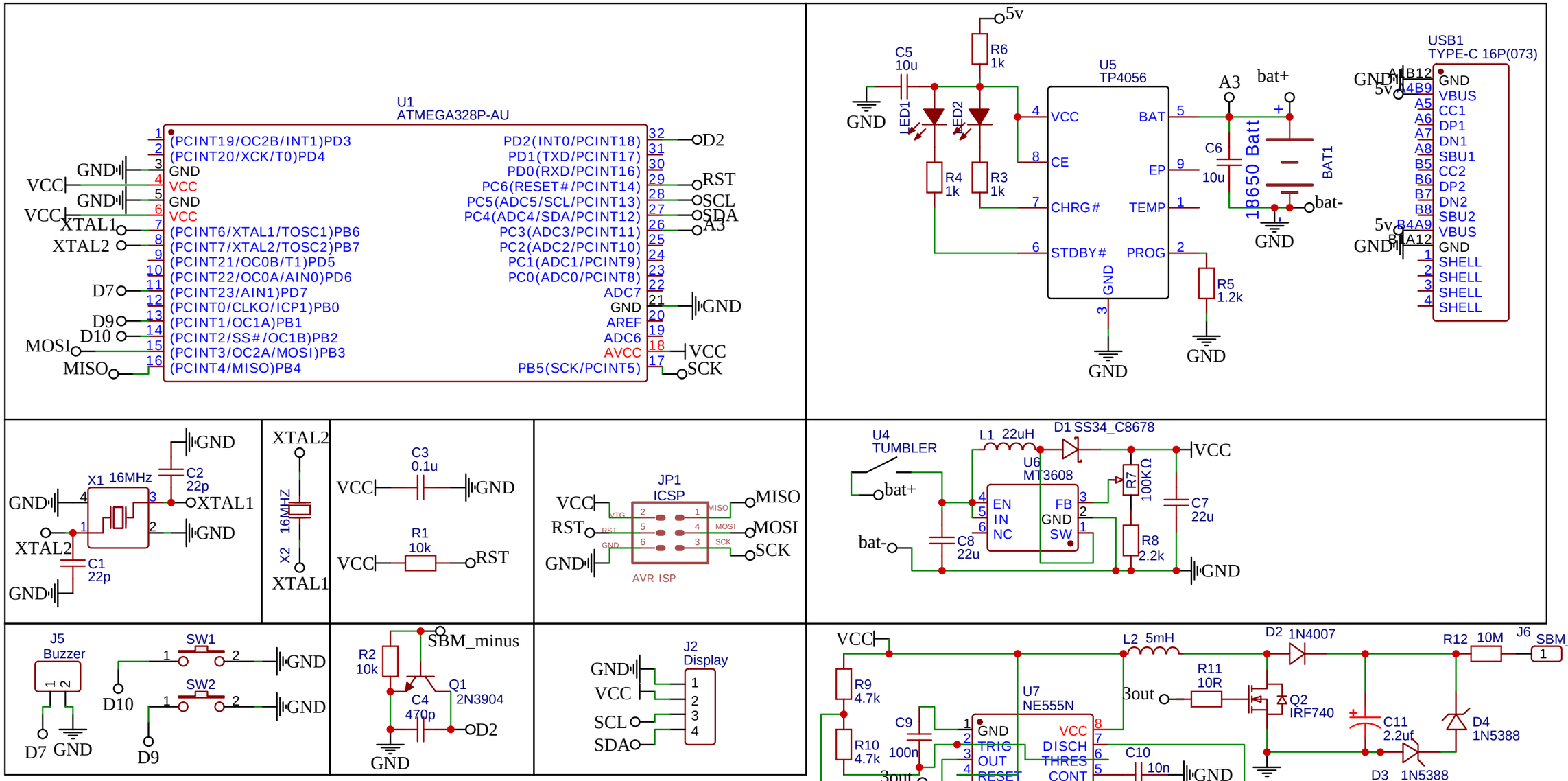

TITLE: Sheet	REV: 2.0
Company: S.V.M.K.	Sheet: 1/1
Date: 2021-10-07 Drawn By: Wainmurk	