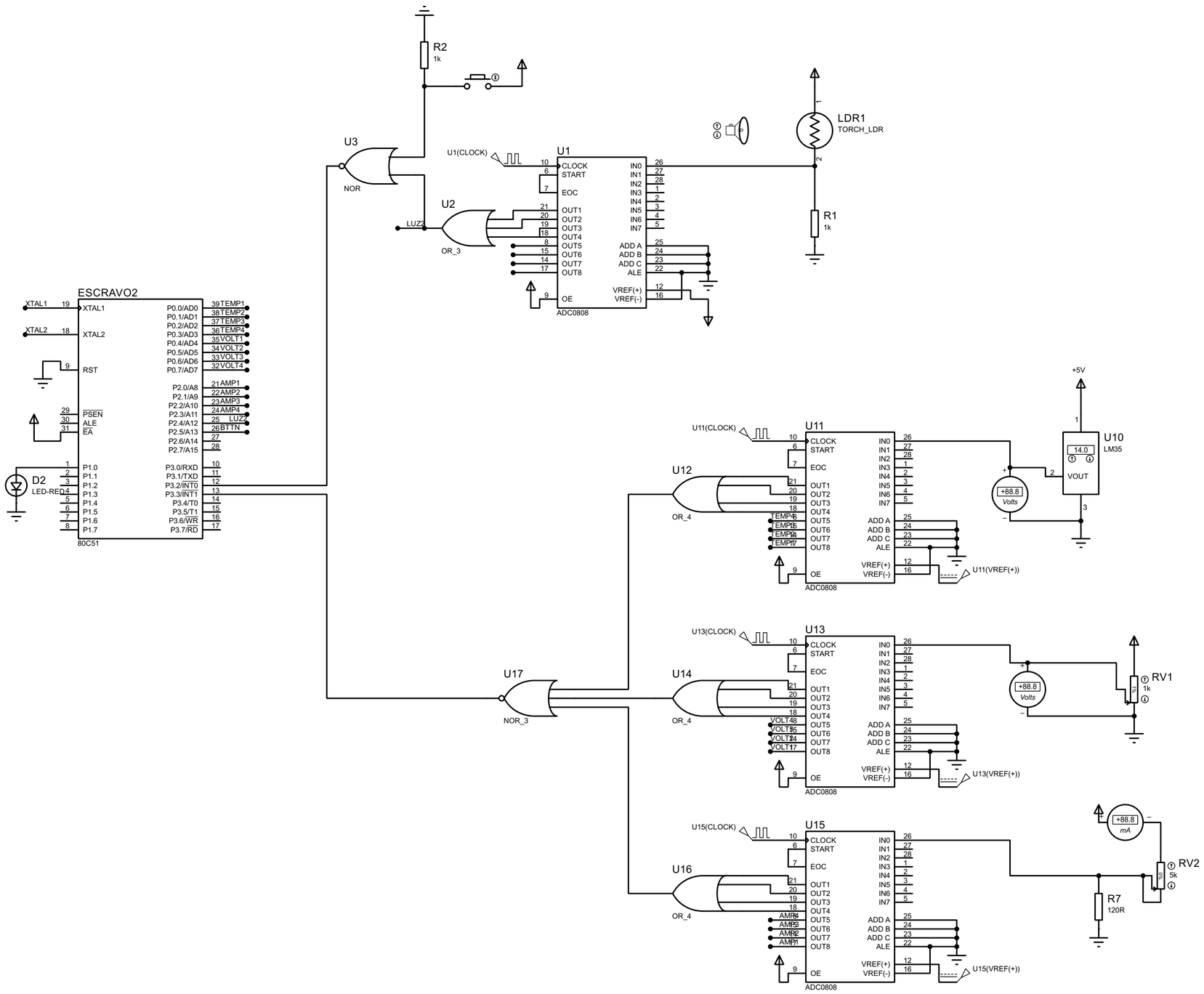

FILE NAME: proteusAntigo.pdsprj	DATE: 14/06/2023
DESIGN TITLE: proteusAntigo.pdsprj	PAGE:
PATH: C:\Users\joser\Desktop\EngComp\SISMICRO\Jumina-oPublica805	
BY: @AUTHOR REV:@REV	TIME: 09:18:19