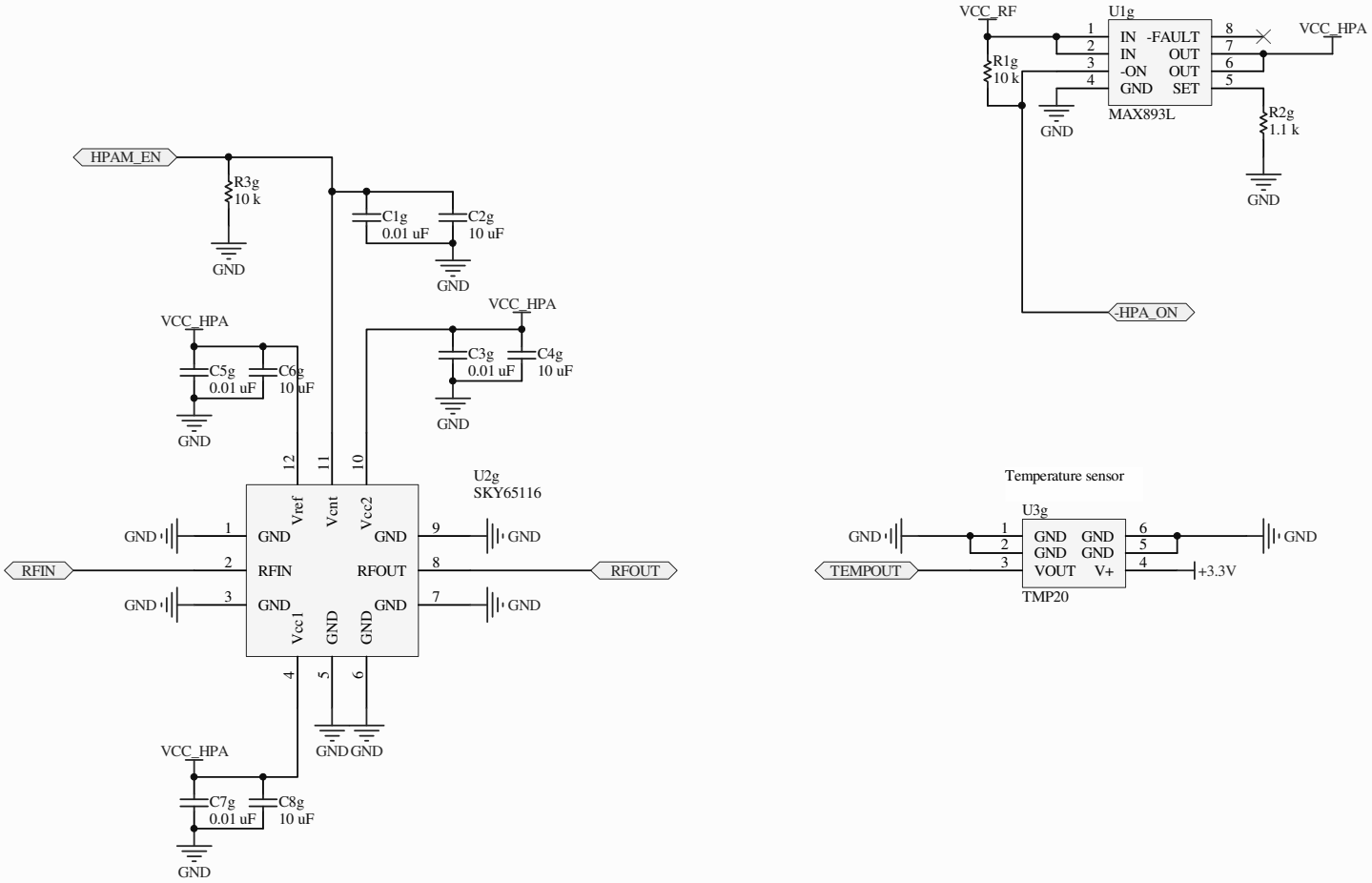

High Power Amplifier Module (HPAM)	
LibreCube LC23-01a	Artur Scholz 2014-12-21