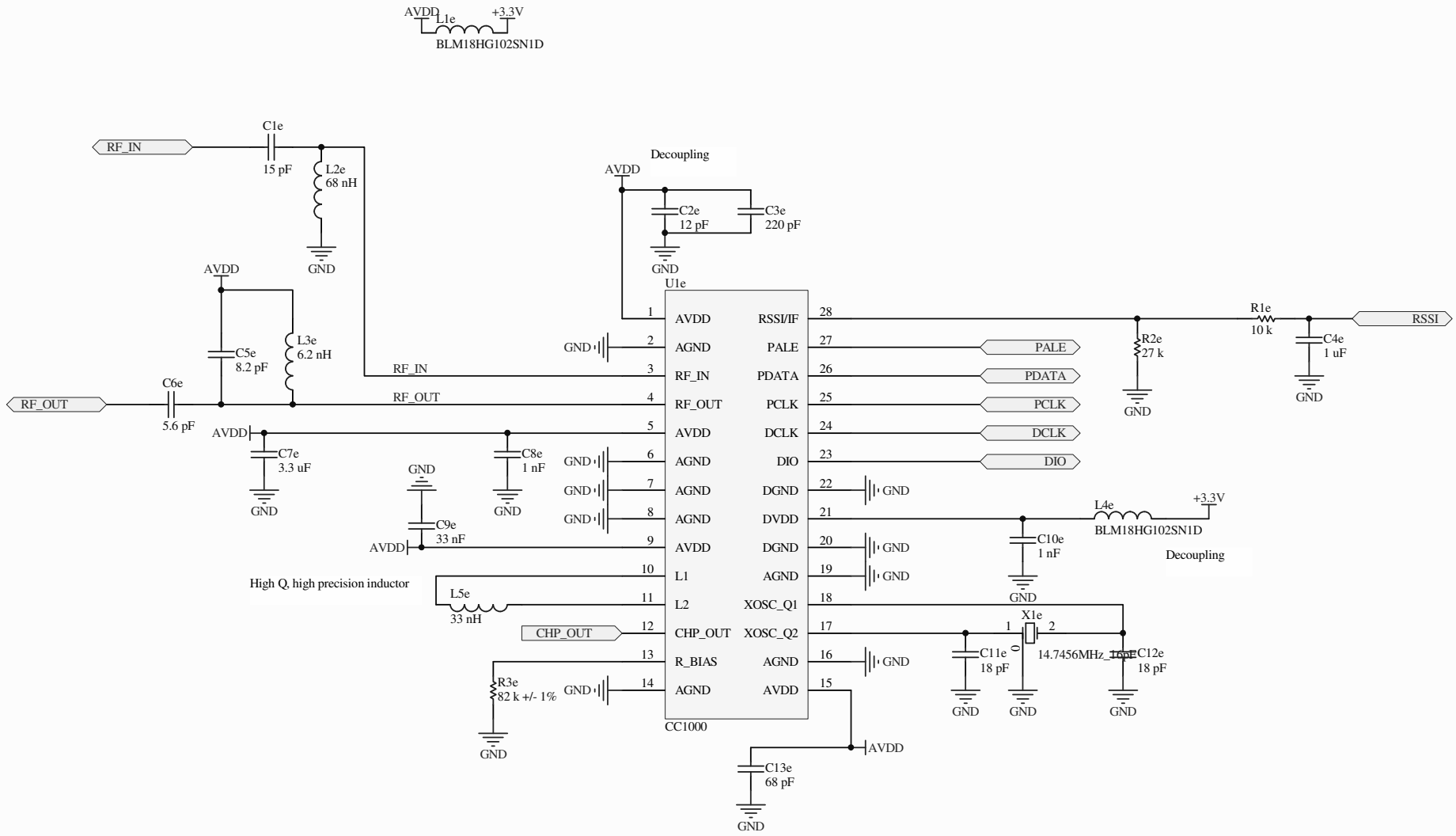

Transceiver module	
LibreCube LC23-01a	Artur Scholz 2011-12-02