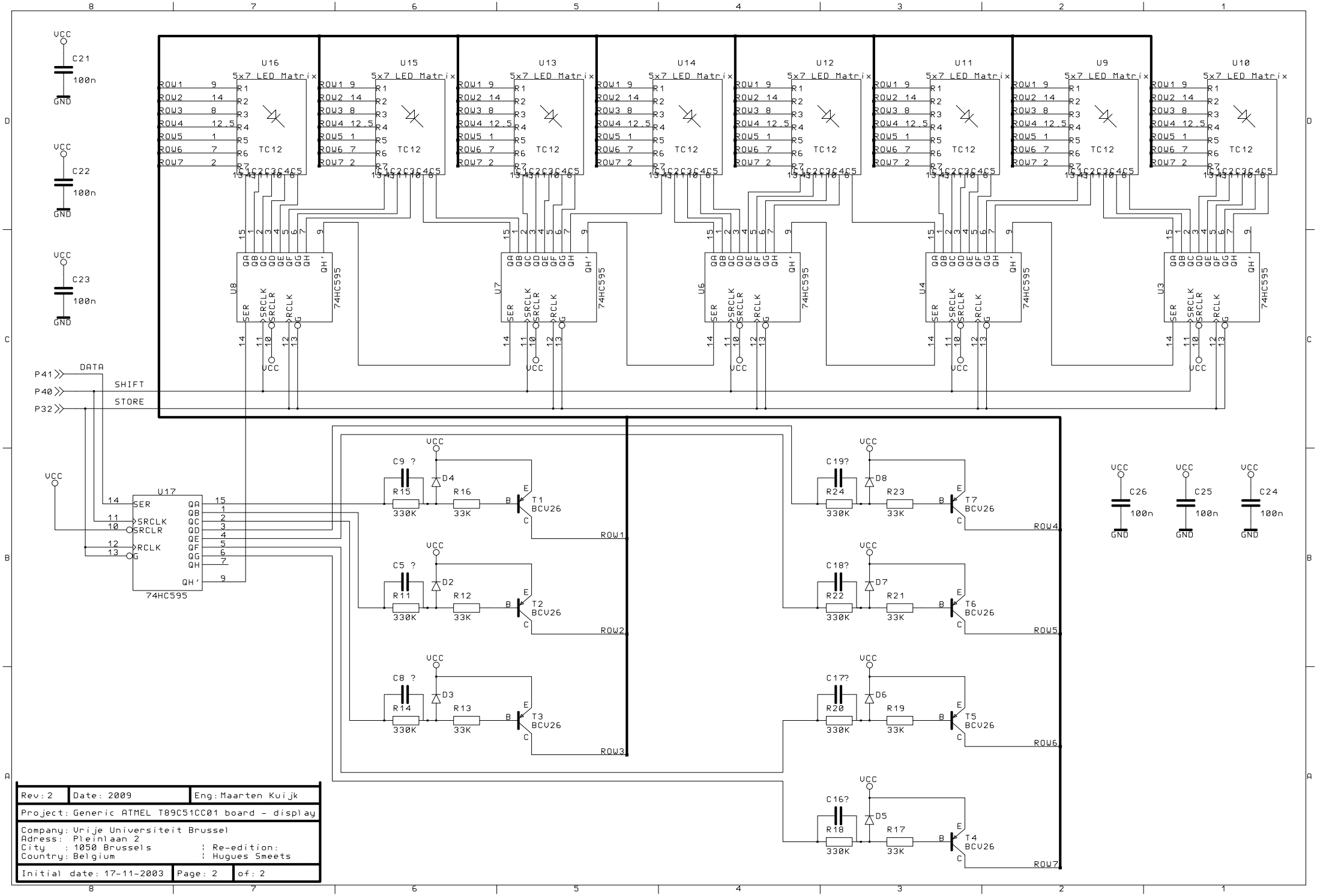

Rev: 2	Date: 2009	Eng: Maarten Kuijk
Project: Generic ATMEL T89C51CC01 board - display		
Company: Vrije Universiteit Brussel Adress: Pleinlaan 2 City : 1050 Brussels Country: Belgium		Re-edition: Hugues Smeets
Initial date: 17-11-2003	Page: 2	of: 2