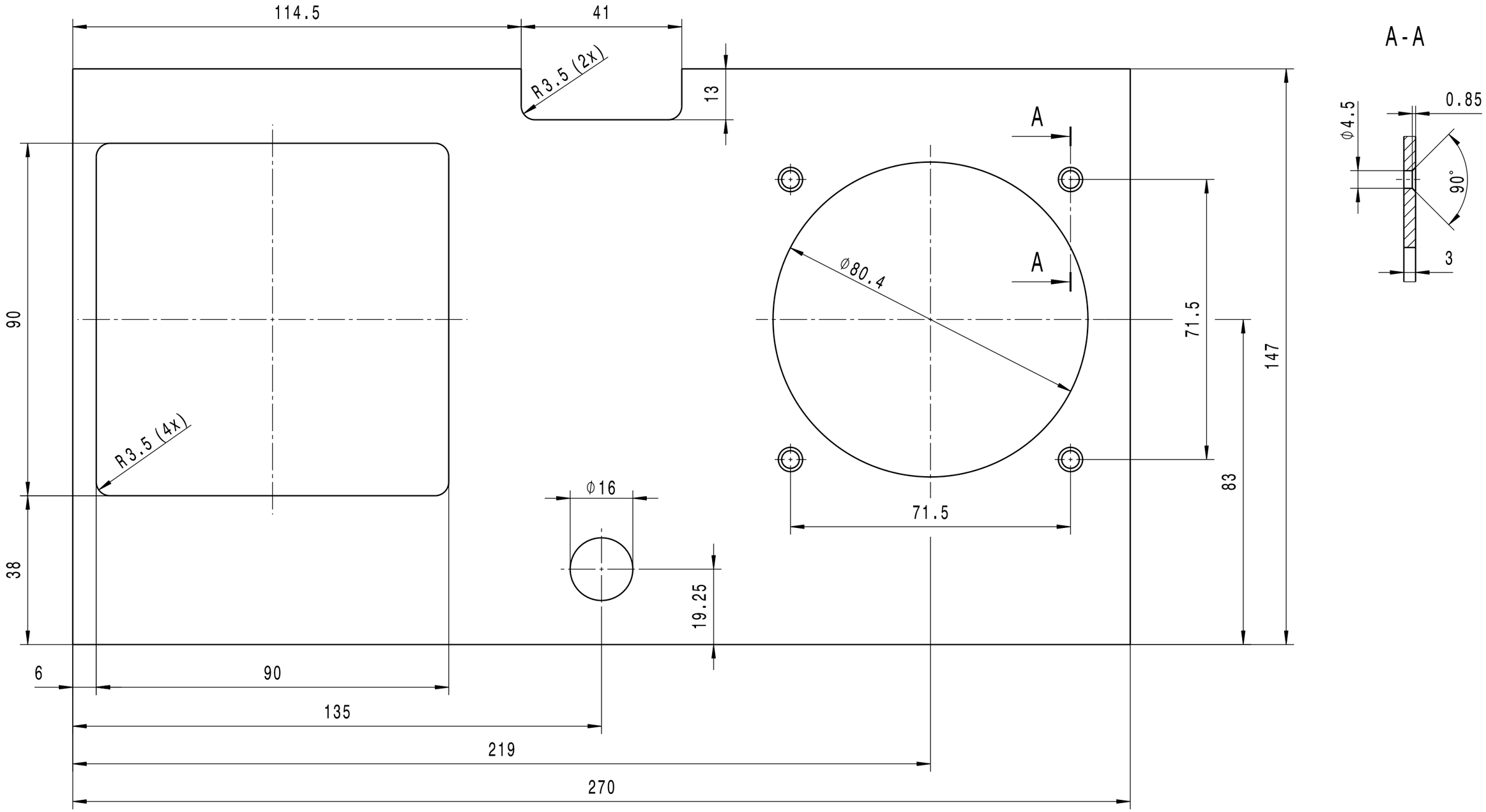

WaltMech3d

	DATE	NAME
DRAWN BY	19.04.22	WaltMech
CHECKED		
STANDARDS		

SCALE: 1:1

WEIGHT: 93g

MATERIAL: ABS

PART NAME:

TOP BACK PANEL

PART NO.: 1.35

SHEET: 1 OF 1

REPLACEMENT FOR

REPLACEMENT WITH