디지털 논리

Multi-level Circuits with NAND and NOR Gates

이 상 화

Objectives

- **Design a minimal multi-level circuit of AND and OR gates to realize a given function.**
  - Two level minimum sum of product using Karnaugh map and QM algorithm
- **Design or analyze a two-level gate circuit using various gate combinations such as AND-OR, NAND-NAND, AND-OR, …**
- **Design multi-level NAND-gate or NOR-gate circuit.**
- **Convert circuits of AND and OR gates to circuits of NAND or NOR gates and conversely.**

Multi-level Gate Circuits (I)

- Gate structures (combination)

  AND-OR, OR-AND, OR-AND-OR, nand-NAND, NOR-NOR. . .

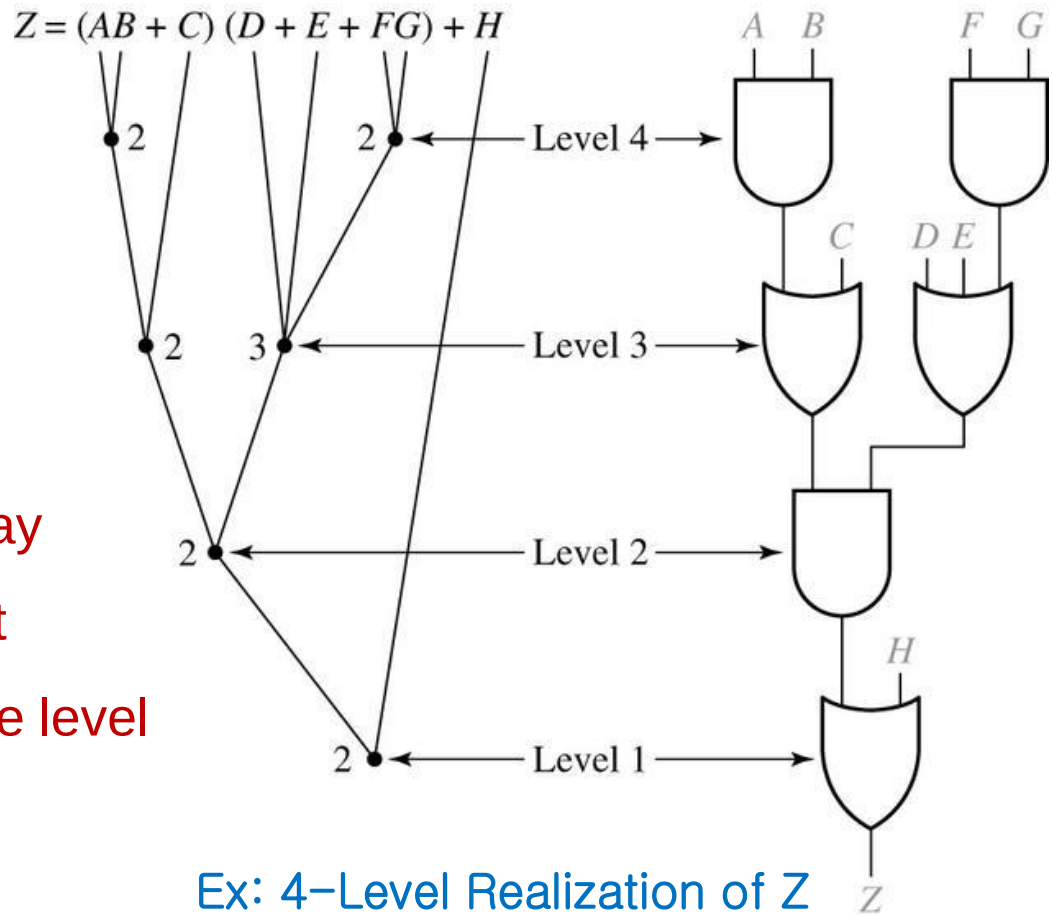

Ex: 4-Level Realization of Z

- More levels, more delay
- More gates, more cost
- Same gate in the same level

Multi-level Gate Circuits (II)

3 Level Realization of Z

$$Z = (AB + C)[(D + E) + FG] + H$$
$$= AB(D + E) + C(D + E) + ABFG + CFG + H$$

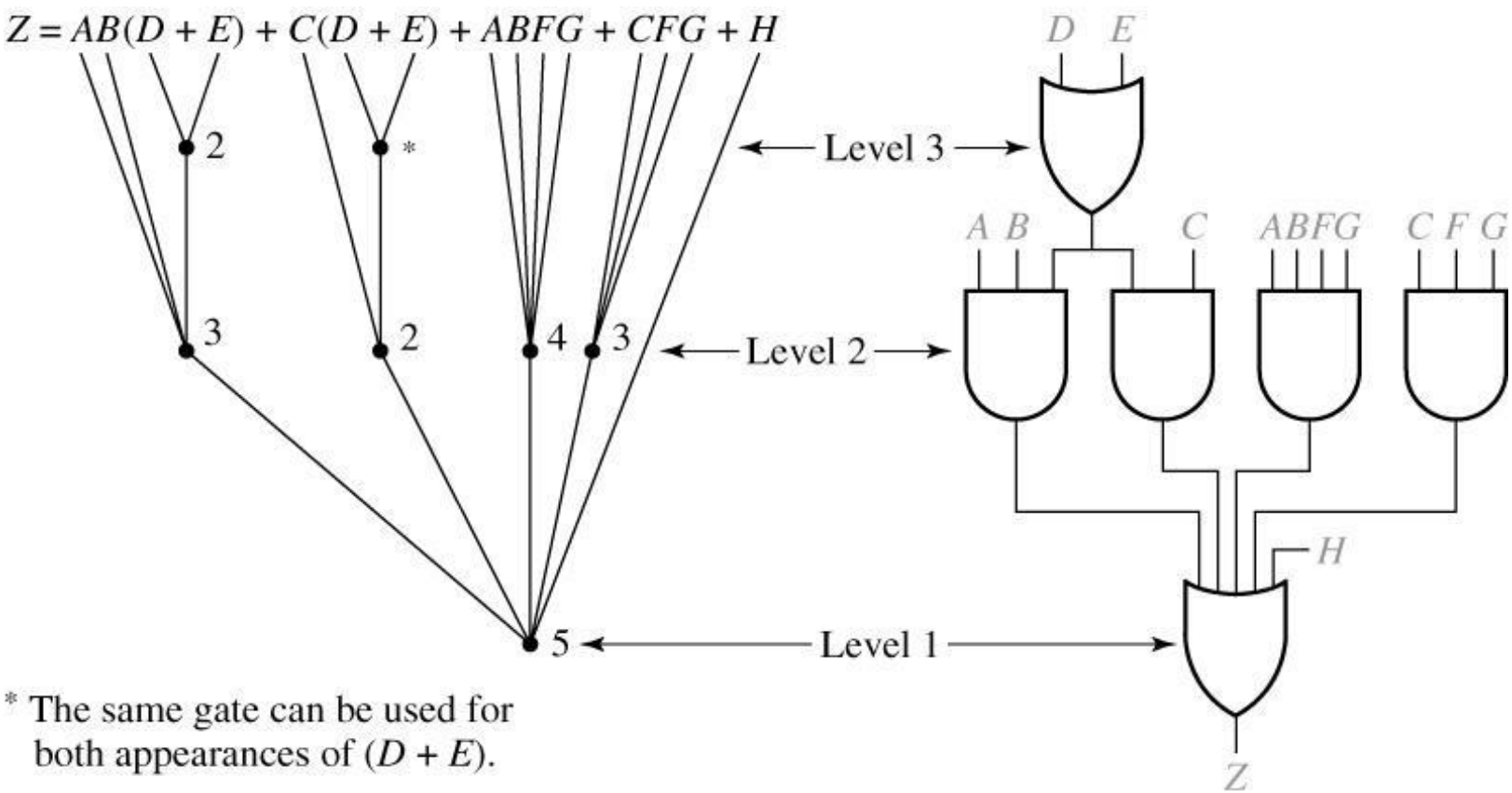

* The same gate can be used for both appearances of $(D + E)$.

Ex: Multi-Level Design (I)

Example : Multi-Level Design Using AND and OR Gates

$$f(a,b,c,d) = \sum m(1,5,6,10,13,14)$$

cd \ ab	00	01	11	10
00	0	0	0	0
01	1	1	1	0
11	0	0	0	0
10	0	1	1	1

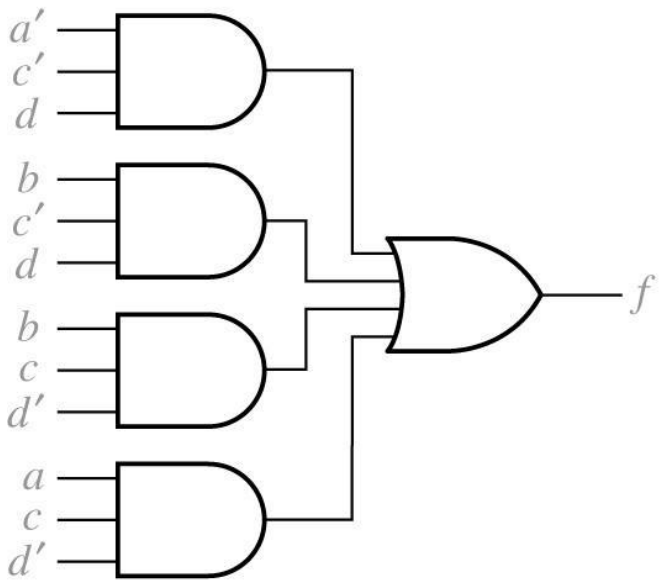

Two-level **AND-OR** gate

$$f = a'c'd + bc'd + bcd' + acd'$$

Ex: Multi-Level Design (II)

From 0's on the Karnaugh map

cd \ ab	00	01	11	10
00	0	0	0	0
01	1	1	1	0
11	0	0	0	0
10	0	1	1	1

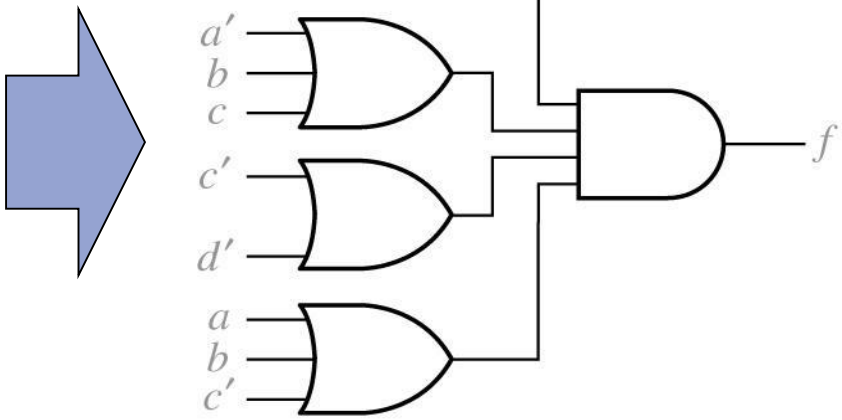

$$f' = c'd' + ab'c' + cd + a'b'c$$

Two-level **OR-AND** gate

$$f = (c+d)(a'+b+c)(c'+d')(a+b+c')$$

Ex: Multi-Level Design (III)

By factoring for multi-level circuits

$$f = a'c'd + bc'd + bcd' + acd'$$
$$= c'd(a' + b) + cd'(a + b)$$

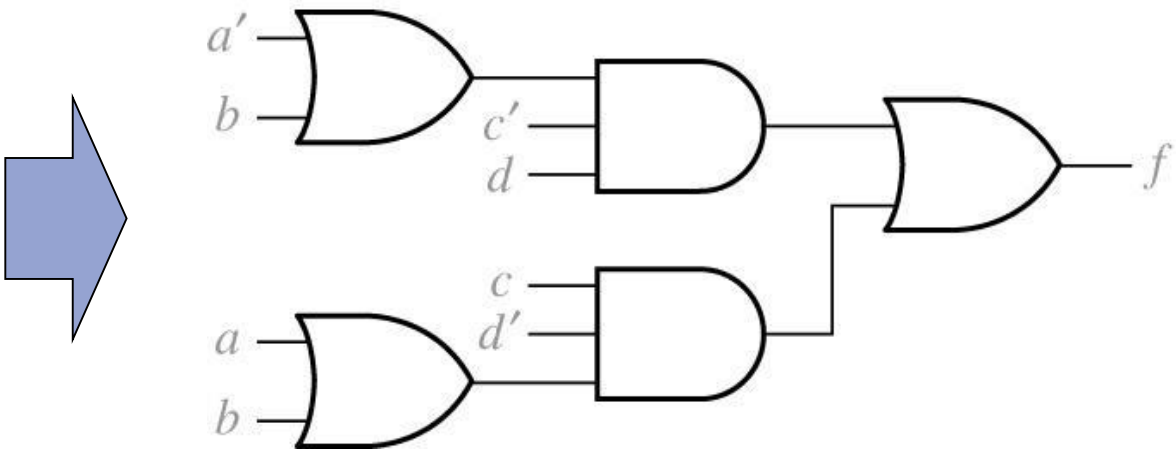

Three-level **OR-AND-OR** gate

Design of Gate Structures

- **Factors of gate structures**
  - Feasibility
  - Economy
  - Extensibility
  - Operation speed
- **NAND and NOR gates are much more popular than AND and OR gates**

  => faster and simplest electronic devices
- **Any logic function can be implemented using only NAND gates or only NOR gates.**
  - Functionally complete for logic functions
  - AND, OR, inverter => NAND, NOR

NAND Gates

$$F = (ABC)' = A' + B' + C'$$

$$F = (X_1 X_2 \ldots X_n)' = X_1' + X_2' + \ldots + X_n'$$

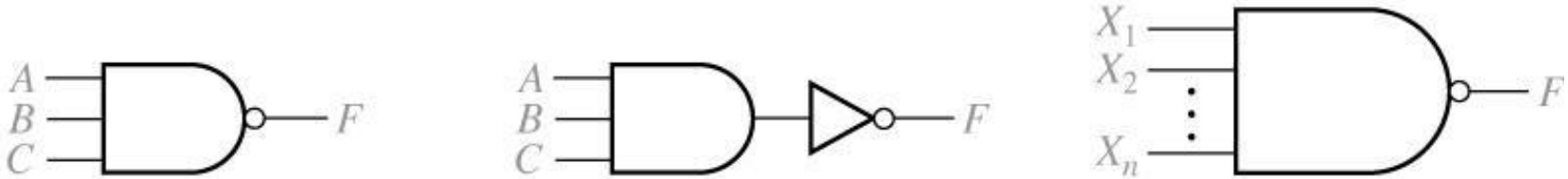

(a) 3-input NAND gate (b) NAND gate equivalent (c) *n*-input NAND gate

NAND (NOR): Universal Gate

- **Universal gate:**
  - Any digital system can be implemented with NAND gates alone.

NAND (NOR) gate is the realization of NOT, AND, and OR.

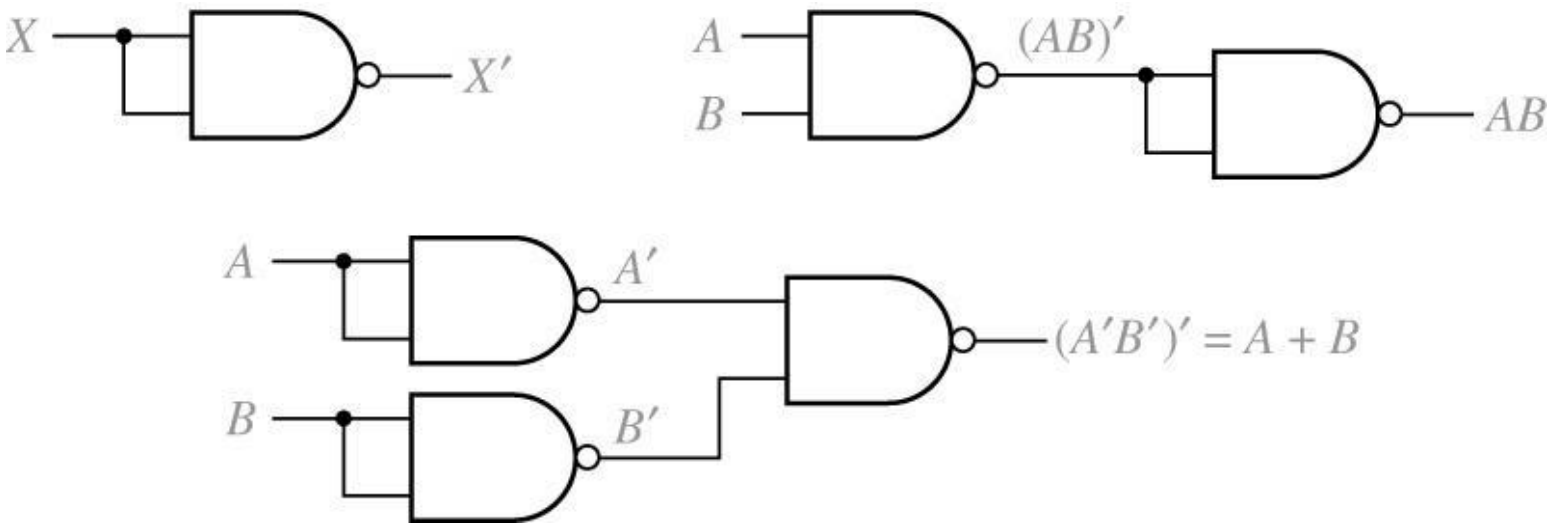

Any switching circuit can be realized using only NAND (NOR) gates.

Variation of 2-Level Circuits (I)

- **Using f=(f')', and DeMorgan's laws**

Starting from a sum of product to obtain NAND−NAND gates

$$F = A + BC' + B'CD = [(A + BC' + B'CD)']'$$ AND-OR form

$$= [A' \cdot (BC')' \cdot (B'CD)']'$$ NAND-NAND

$$= [A' \cdot (B' + C) \cdot (B + C' + D')]'$$ OR-NAND

$$= A + (B' + C)' + (B + C' + D')'$$ NOR-OR

Variation of 2-Level Circuits (II)

Different forms of the same function

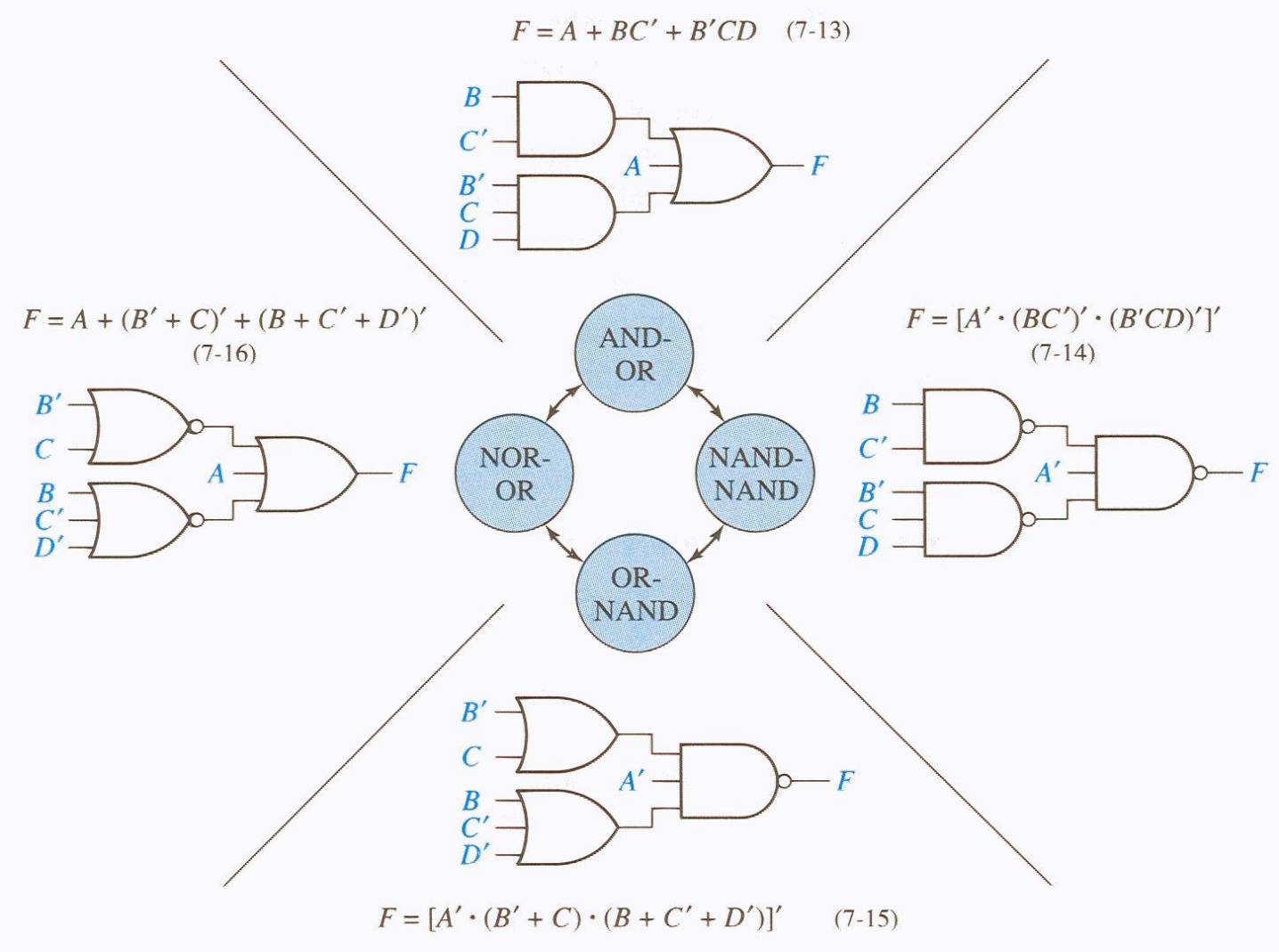

Variation of 2-Level Circuits (III)

Starting from a product of sum to obtain NOR−NOR gates

$$
\begin{aligned}
F &= (A+B+C)(A+B'+C')(A+C'+D) && \text{OR-AND form} \\
&= \{[(A+B+C)(A+B'+C')(A+C'+D)]'\}' \\
&= [(A+B+C)'+(A+B'+C')'+(A+C'+D)']' && \text{NOR-NOR} \\
&= [A'B'C'+A'BC+A'CD']' && \text{AND-NOR} \\
&= (A'B'C')'(A'BC)'(A'CD')' && \text{NAND-AND}
\end{aligned}
$$

Variation of 2-Level Circuits (IV)

Different forms of the same function

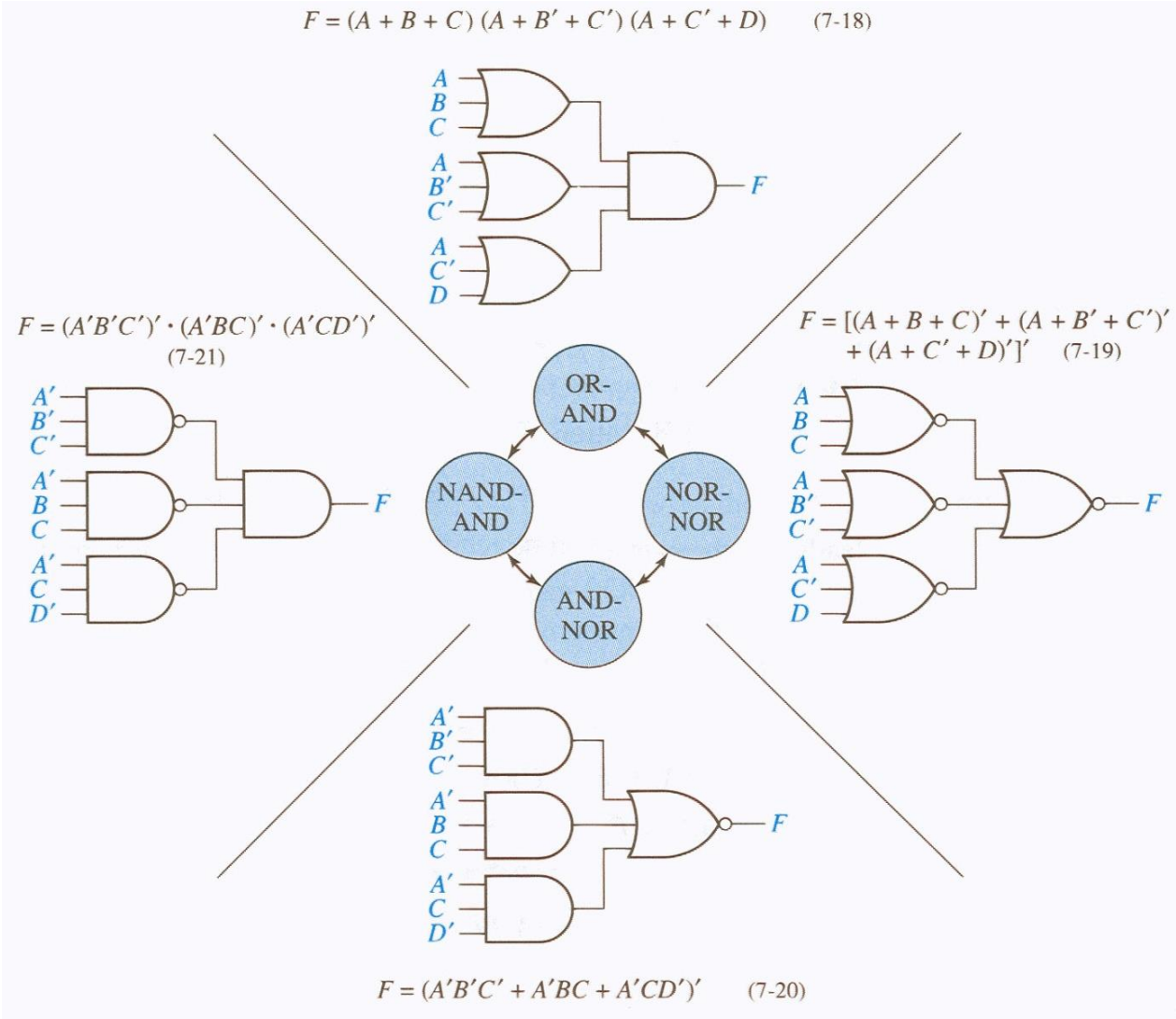

2-Level NAND-NAND / NOR-NOR Circuit (I)

NAND−NOR can only realize products of literals.

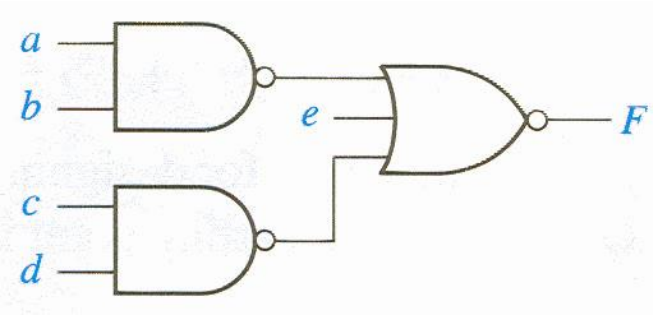

$$F = [(ab)' + (cd)' + e]' = abcde'$$

2−level NAND−NAND gates design

1. Find minimum **sum of products**
2. Draw 2-level AND-OR gates
3. Replace all gates with NAND gates, Single literal input is complemented

2−level NOR−NOR gates design

1. Find minimum **product of sums**
2. Draw 2-level OR-AND gates
3. Replace all gates with NOR gates, Single literal input is complemented

We assume that complements of all the variables are available.
We use DeMorgan's laws and (F')'=F

2-Level NAND-NAND/NOR-NOR Circuit (II)

AND−OR to NAND−NAND transformation

$$F = \ell_1 + \ell_2 + \cdots + P_1 + P_2 + \cdots$$

After applying DeMorgan's law,

$$F = (\ell_1' \, \ell_2' \cdots P_1' \, P_2' \cdots)'$$

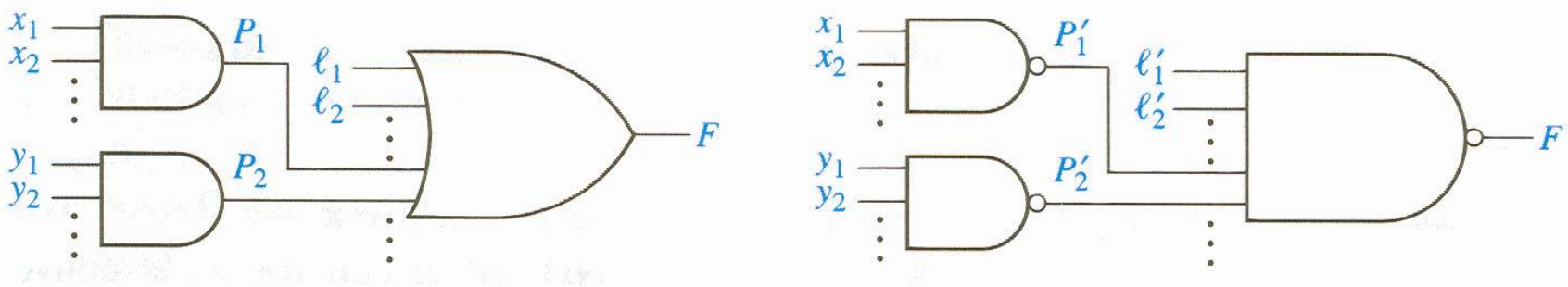

(a) Before transformation

(b) After transformation

Multi-level NAND Gates Circuits

Transform OR gates into NAND gates circuits (AND−OR => NAND−NAND)

$$F_1 = a'[b' + c(d + e') + f'g'] + hi'j + k$$

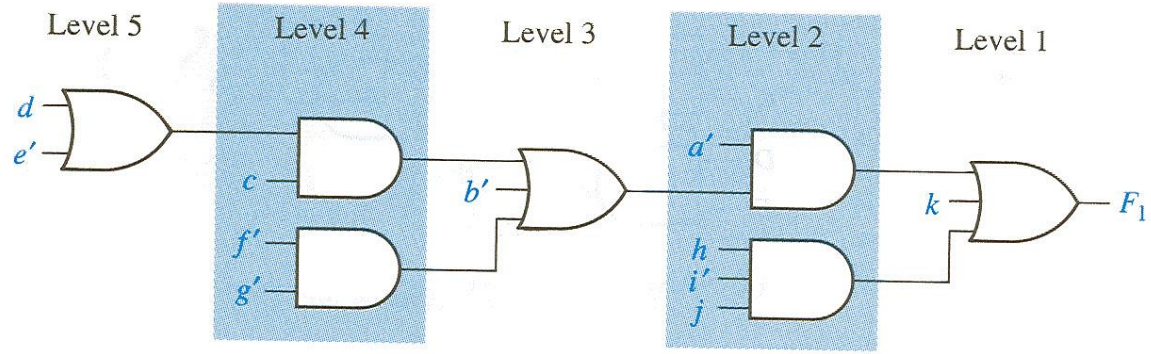

(a) AND-OR network

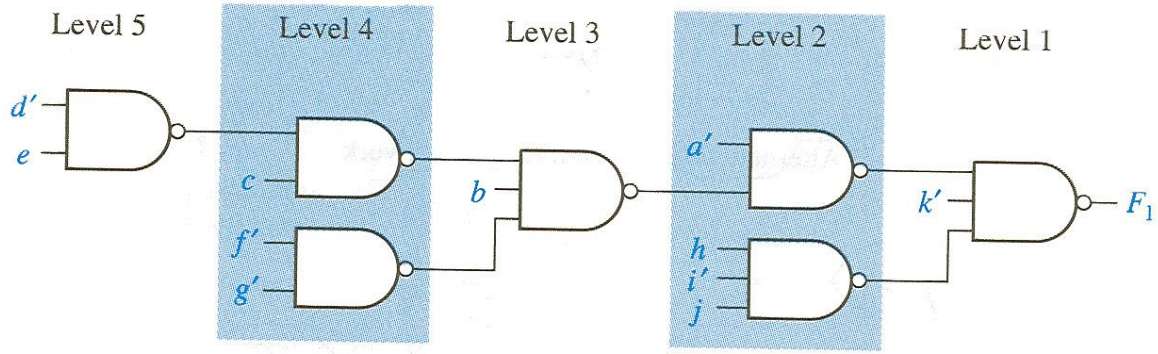

(b) NAND network

Circuit Conversion (I)

Alternative gate symbols by DeMorgans' laws.

Inverter (complement) is represented by a bubble.

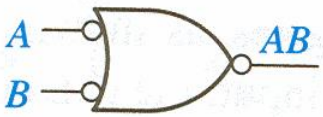

$AB = (A' + B')'$

(a) AND

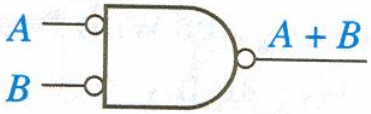

$A + B = (A'B')'$

(b) OR

$(AB)' = A' + B'$

(c) NAND

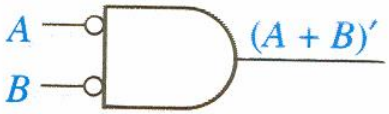

$(A + B)' = A'B'$

(d) NOR

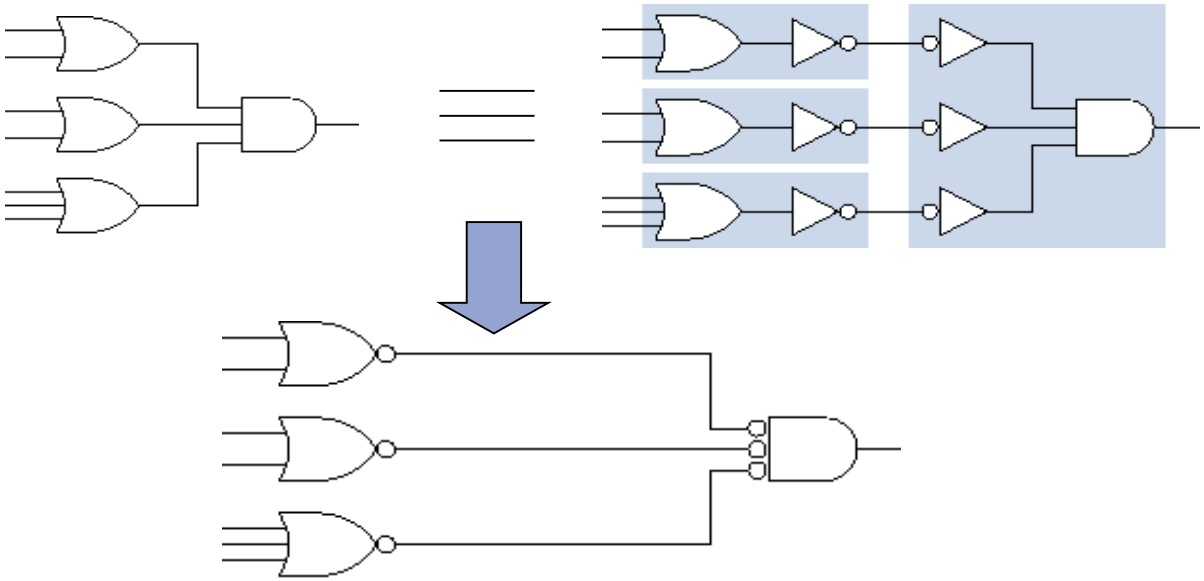

Circuit Conversion (II)

NAND−NAND => OR − AND

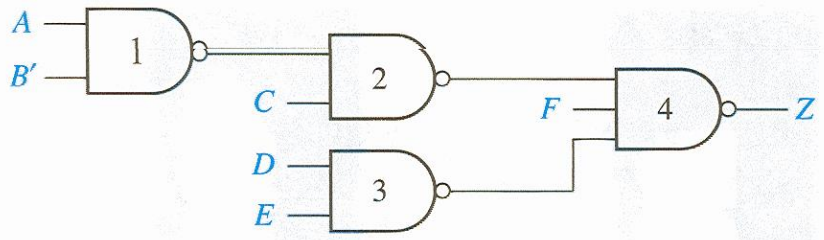

(a) NAND gate network

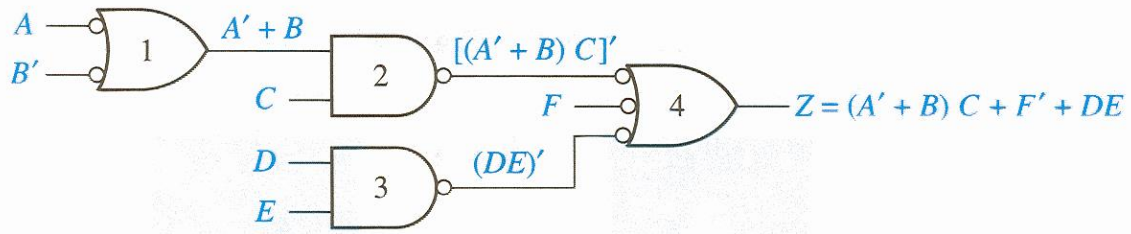

(b) Alternate form for NAND gate network

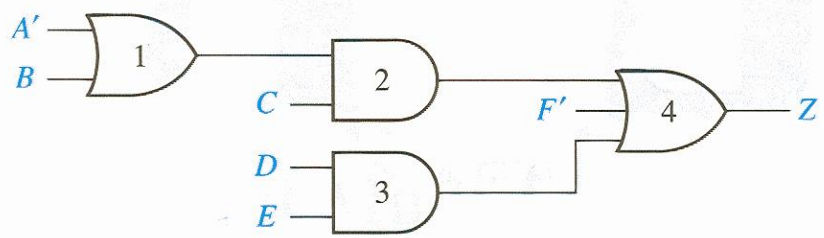

(c) Equivalent AND-OR network