디지털 논리

Flip-Flops

이 상 화

SR Latch

- S-R Latch Operation

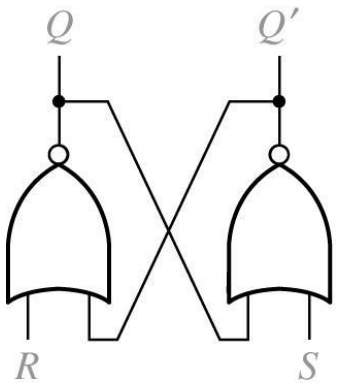

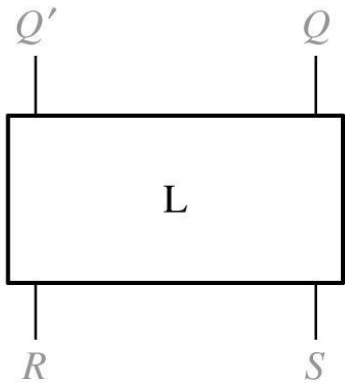

Latch outputs should be complement, Q and Q'

$S(t)$	$R(t)$	$Q(t)$	$Q(t+\varepsilon)$
0	0	0	0
0	0	1	1
0	1	0	0
0	1	1	0
1	0	0	1
1	0	1	1
1	1	0	-
1	1	1	-

$$\boxed{Q^{+} = S + R'Q \qquad (SR = 0)}$$

Clock Signals

- **Very important with most sequential circuits**
  - **State variables change at clock edge.**

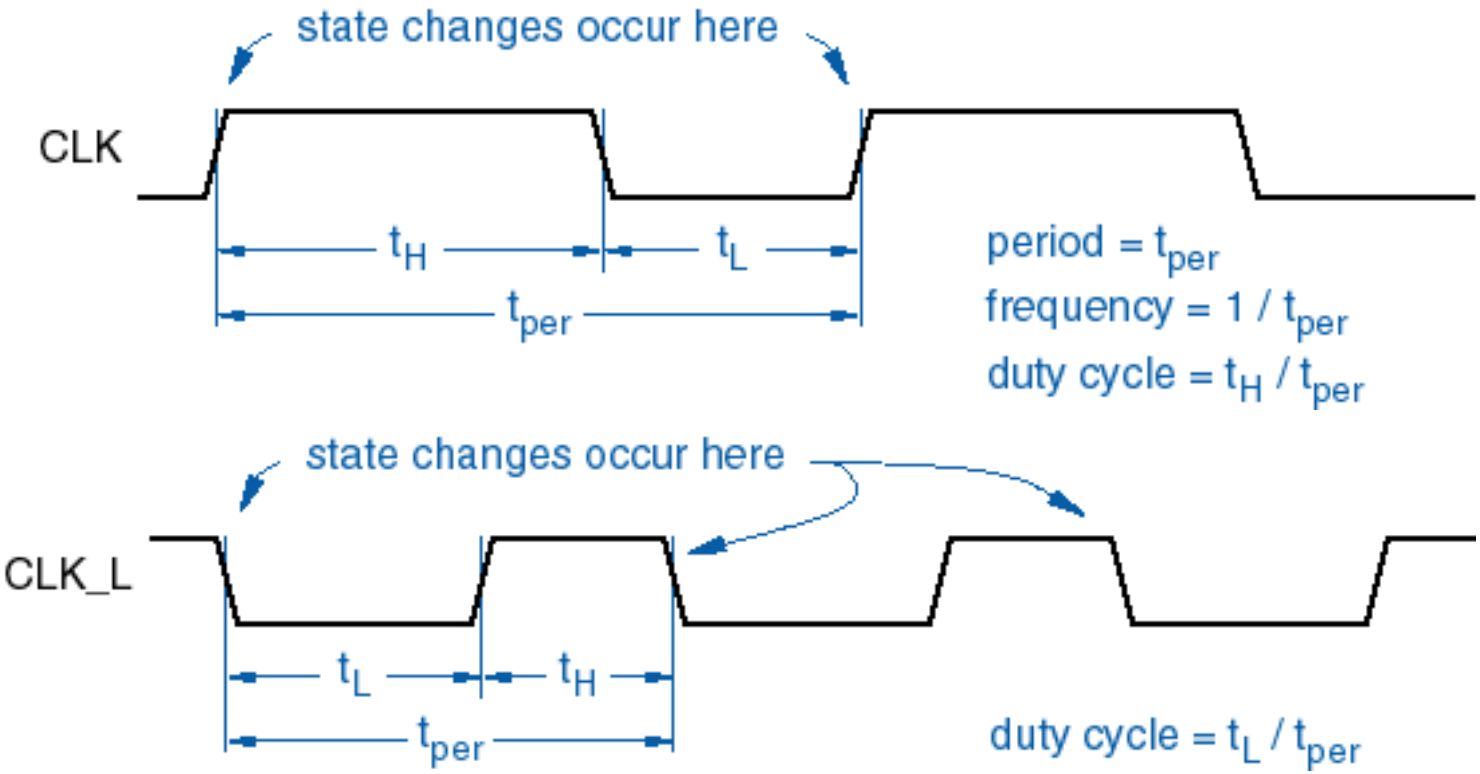

Flip-Flops

- Serious difficulty of latches
  - => unpredictable situation
  - => succession of changes of state

  ➔ Need to control outputs by a clock input

  ➔ Flip-Flops
- Edge-triggered flip-flops
  - D flip-flop
  - T flip-flop
- Master-Slave flip-flops
  - S-R flip-flop
  - J-K flip-flop

Edge-Triggered D Flip-Flop

- D Flip-Flops

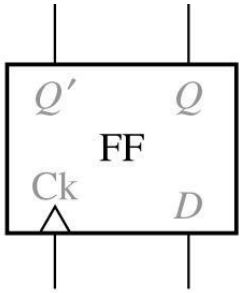

(a) Rising-edge trigger

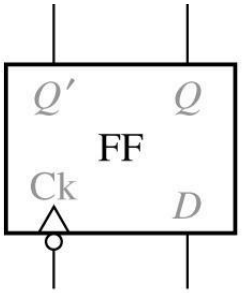

(b) Falling-edge trigger

D	Q	Q^+
0	0	0
0	1	0
1	0	1
1	1	1

(c) Truth table

$$Q^+ = D$$

- Timing for D Flip-Flop (Falling-Edge Trigger)

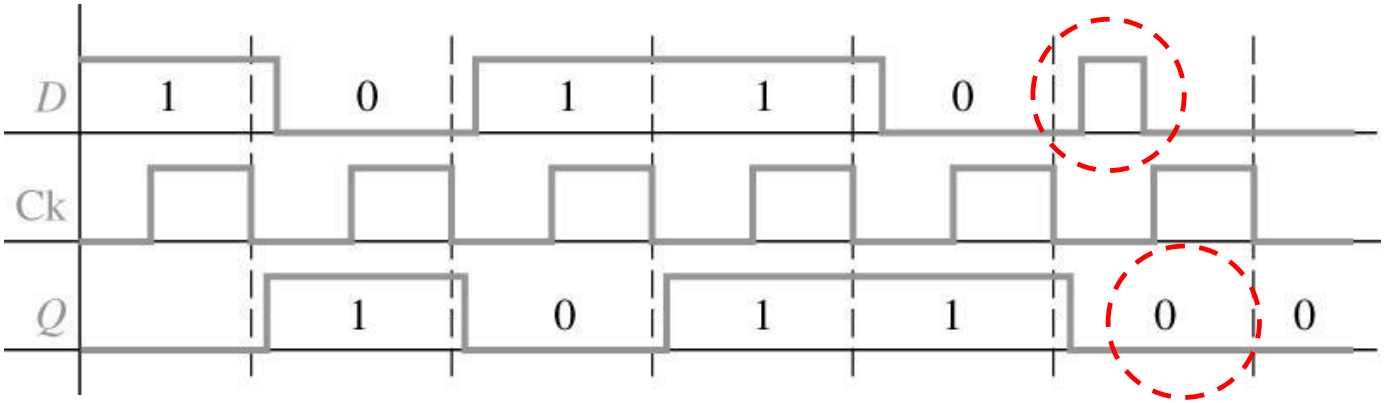

매우 짧은 신호는 사라짐
Clock period << signal period

D Flip-Flop Implementation

D Flip-Flop (Rising-Edge Trigger)

=> 2 개의 D latch를 연결하여 edge trigger 구현

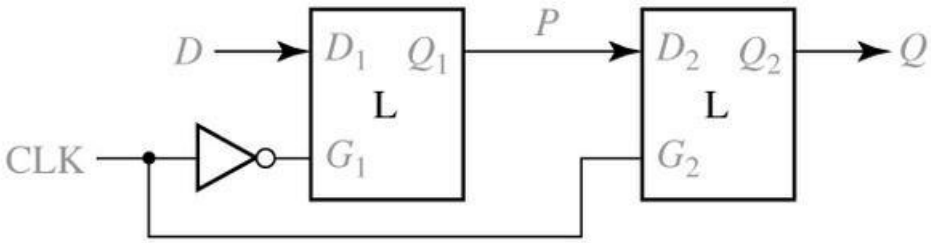

(a) Construction from two gated D latches

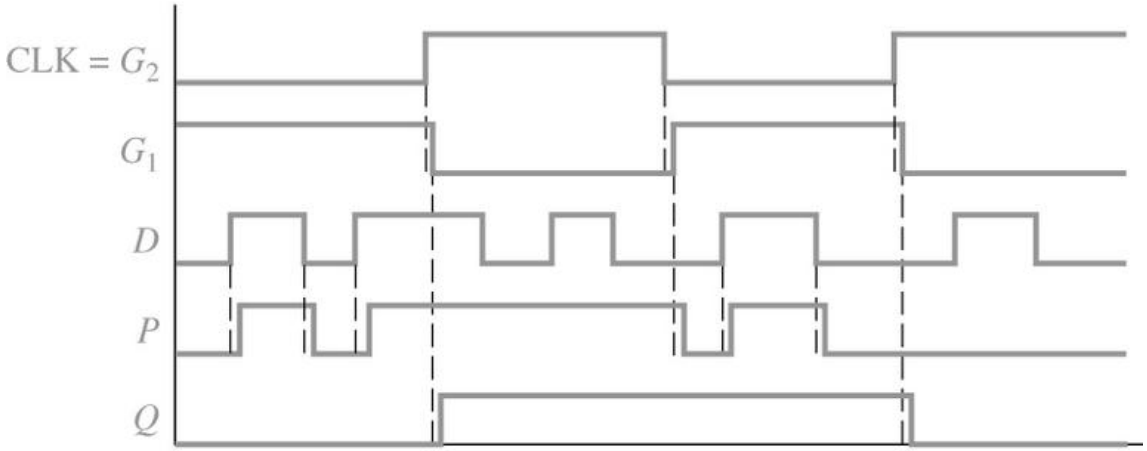

(b) Time analysis

오직 rising edge
순간에만 Q 상태 변화

Timing Parameters for Edge Trigger

- **D input to an edge-triggered FF must be held at a constant value for a period of time before and after the active edge of the clock .**
  - Setup time (D before active edge)
  - Hold time (D after active edge)
  - Propagation delay
- **Minimum period**

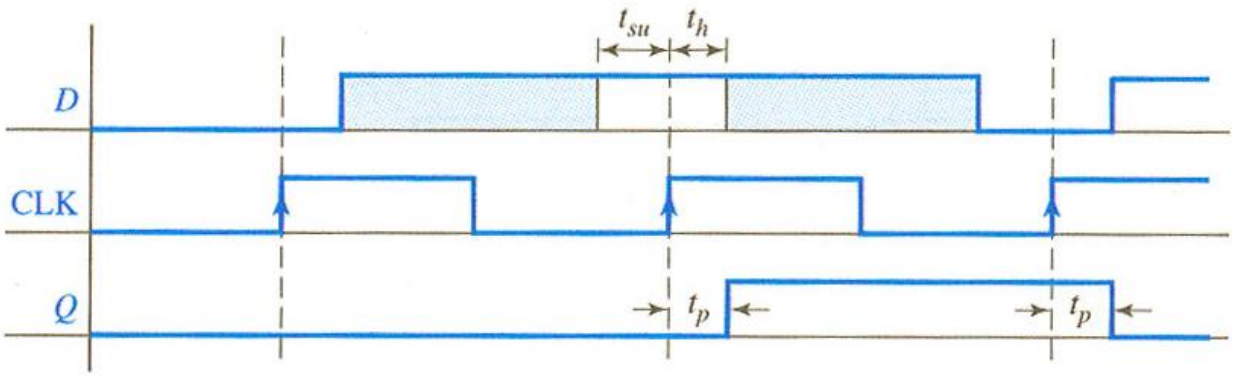

Waveform of signals and clocks

S-R Flip-Flop

Same with S-R Latch except clock triggering

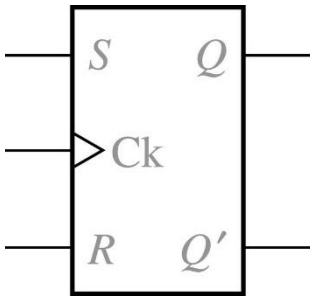

S=R=0	No state change
S=1, R=0	Set Q to 1 (after active Ck edge)
S=0, R=1	Reset Q to 0 (after active Ck edge)
S=R=1	Not allowed

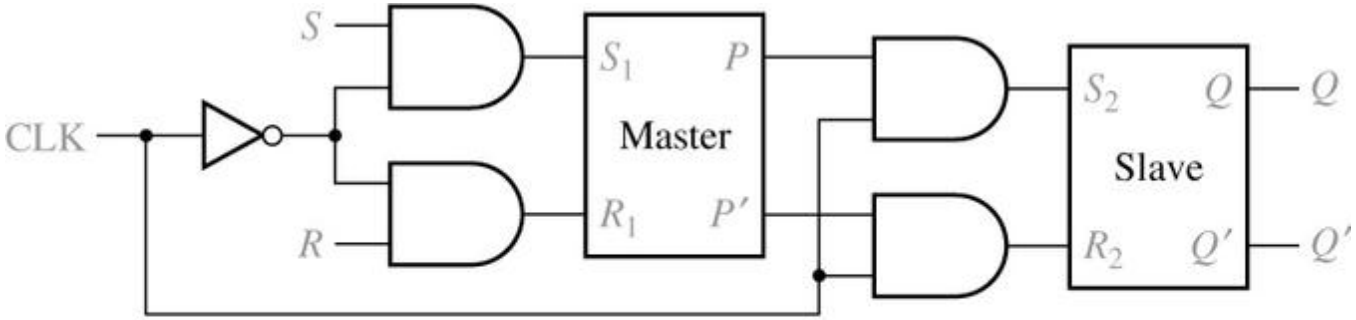

(a) Implementation with two latches

CLK=0, the outputs of master latch are set, and those of slave latch are held.
CLK=1, the outputs of master latch are held, and those of slave latch are set.
CLK=0, Q of slave is held, and new input of master is available.

Timing Diagram: S-R Flip-Flop (I)

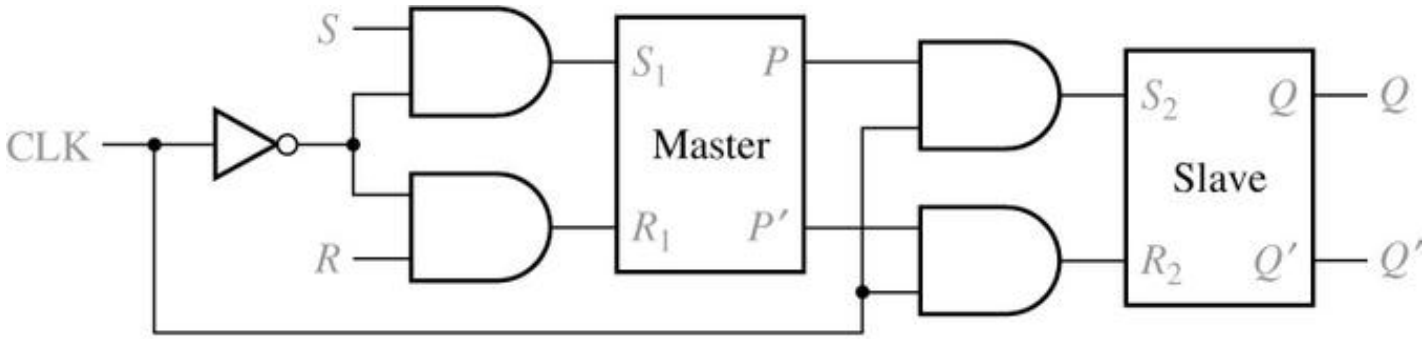

- Input state should be changed when CLK =1

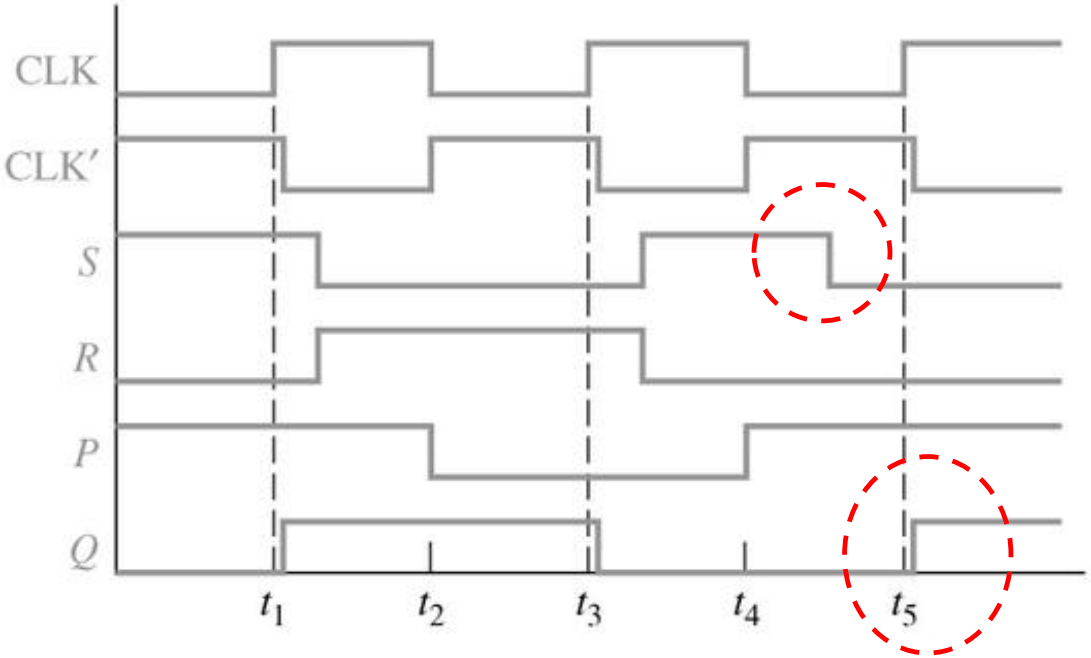

(b) Timing analysis

Undesirable
S=R=0 -> no change P

Timing Diagram: S-R Flip-Flop (II)

- For edge rising edge triggered flip-flop,
  - the value of the inputs is sensed at the rising edge of clock
  - the inputs can change while the clock is low

- For master-slave flip-flop,
  - the inputs (S, R) can change while the clock is high

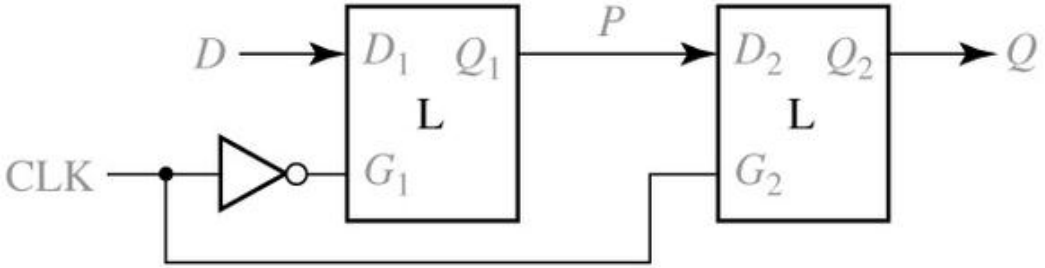

Master-Slave J-K Flip-Flop

- Same with S-R FF except allowing J=K=1
  - When J=K=1, state is changed at the active edge.

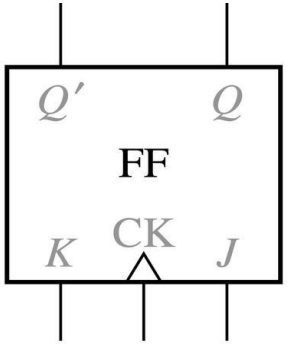

(a) J-K flip-flop

J	K	Q	Q^+
0	0	0	0
0	0	1	1
0	1	0	0
0	1	1	0
1	0	0	1
1	0	1	1
1	1	0	1
1	1	1	0

(b) Truth table

$$Q^+ = JQ' + K'Q$$

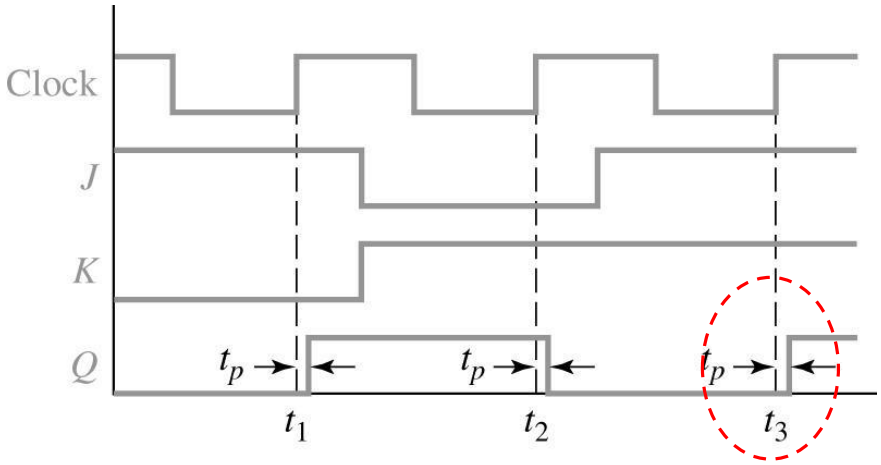

(c) J-K flip-flop timing

J=K=1, state is changed

Master-Slave J-K Flip-Flop

- Feedback of outputs of slave

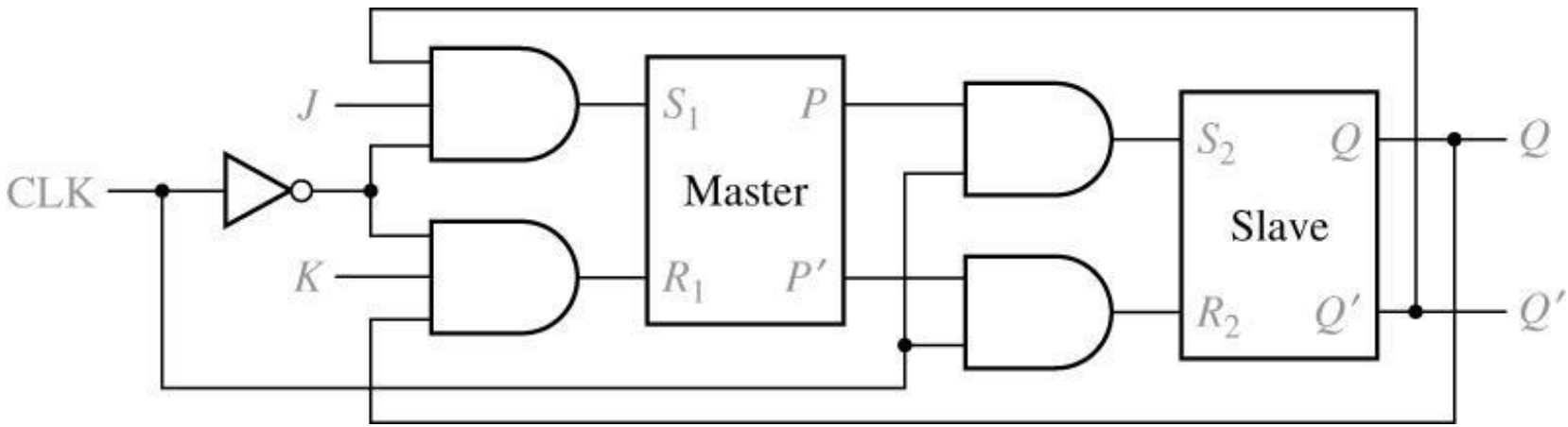

When J=K=1, only one of J CLK ’Q’ and K CLK’ Q is 1.
Q=0, JCLK’Q’ =1, P=1, Q=1
Q=1, KCLK’Q =1, P=0, Q=0

T Flip-Flop

- Toggling state when T=1

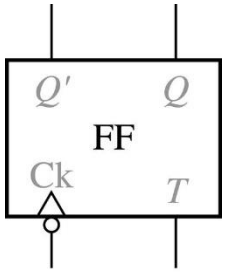

(a)

T	Q	Q^+
0	0	0
0	1	1
1	0	1
1	1	0

(b)

$$Q^+ = T'Q + TQ' = T \oplus Q$$

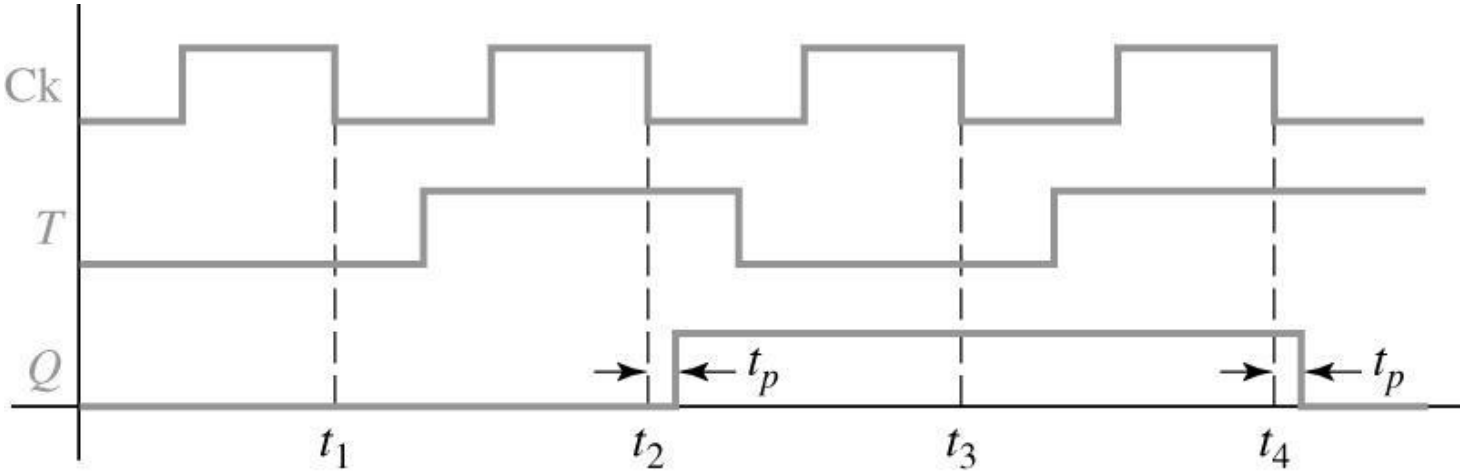

Falling edge trigger

Implementation of T Flip-Flop

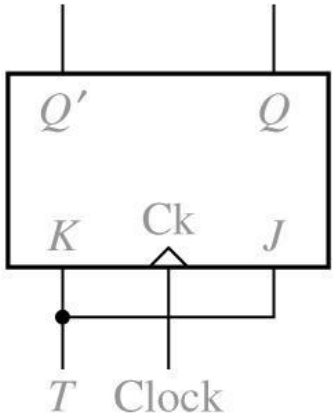

$$Q^{+} = JQ' + K'Q = TQ' + T'Q$$

(a) Conversion of J-K to T

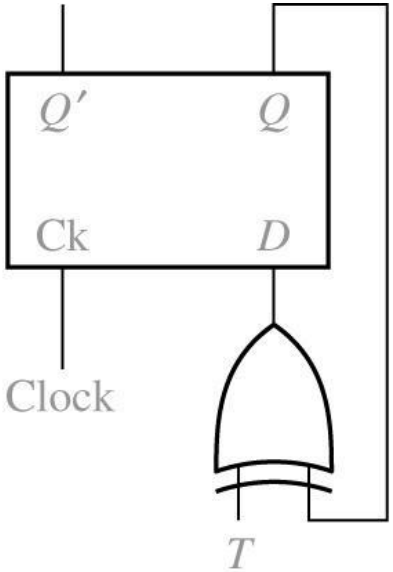

(b) Conversion of D to T

Clear and Preset

- D Flip-Flop with Clear and Preset for initial states

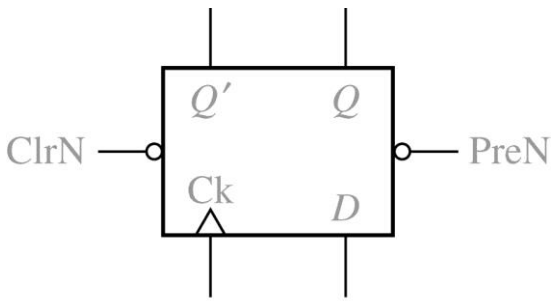

(a)

Ck	D	PreN	ClrN	Q^+
x	x	0	0	(not allowed)
x	x	0	1	1
x	x	1	0	0
↑	0	1	1	0
↑	1	1	1	1
0,1,↓	x	1	1	Q(no change)

(b)

- Timing Diagram for D Flip-Flop with Asynchronous Clear and Preset

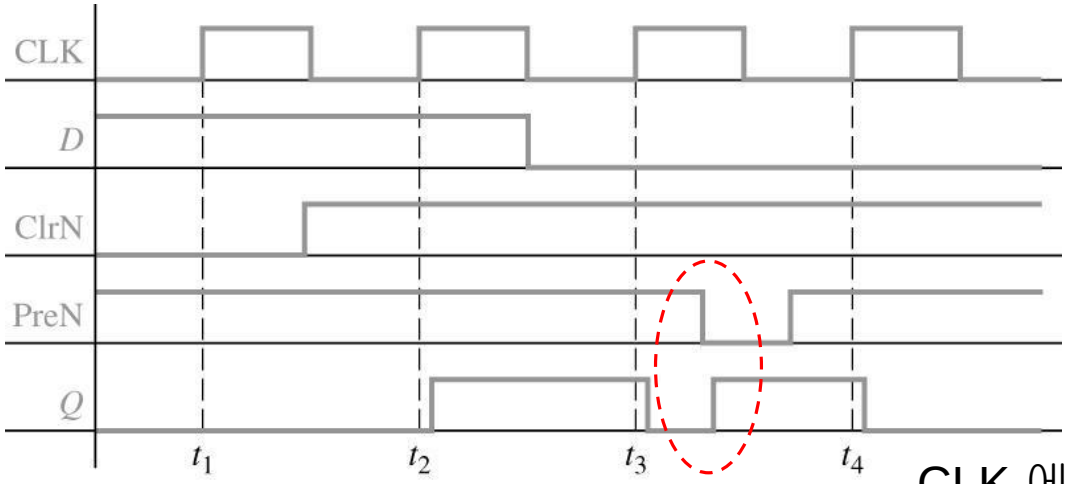

CLK 에 상관없이 Q 변화

D Flip-Flop with Clock Enable

When we use many FFs at the same time,
We must keet the state irregardless of CLK
a) Gate delay of CLK enable cause loss of synchronization

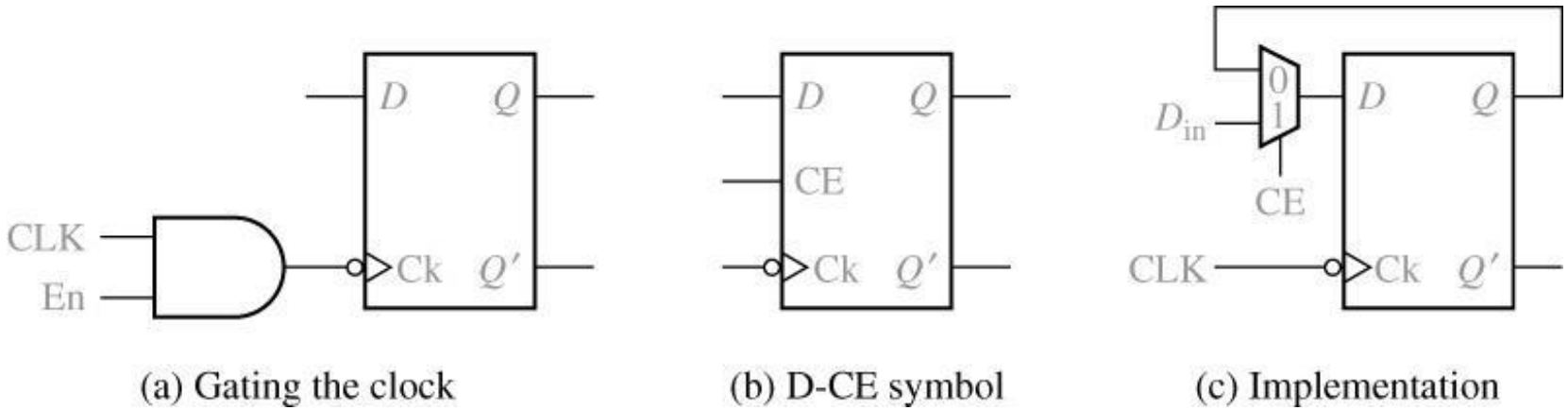

(a) Gating the clock (b) D-CE symbol (c) Implementation

The characteristic equation : $Q^{+} = Q \cdot CE' + D \cdot CE$

The MUX output : $Q^{+} = D = Q \cdot CE' + D_{in} \cdot CE$