디지털 논리

Register

이 상 화

Registers and Counters

- Sequential circuits
  - The next output depends on the current inputs and outputs. (vs combinational circuit)
  - State machine
  - Consisting of FFs
- Registers
  - Store and shift binary data (one bit per one FF)
  - Consisting of flip-flops with a common clock
- Counters
  - Changing states in a prescribed sequence with input pulse or clock (rising/falling edge)
  - Consisting of flip-flops with a common clock
  - No inputs

Registers and Register Transfers (I)

Register: Several flip-flops are grouped with a common clock.

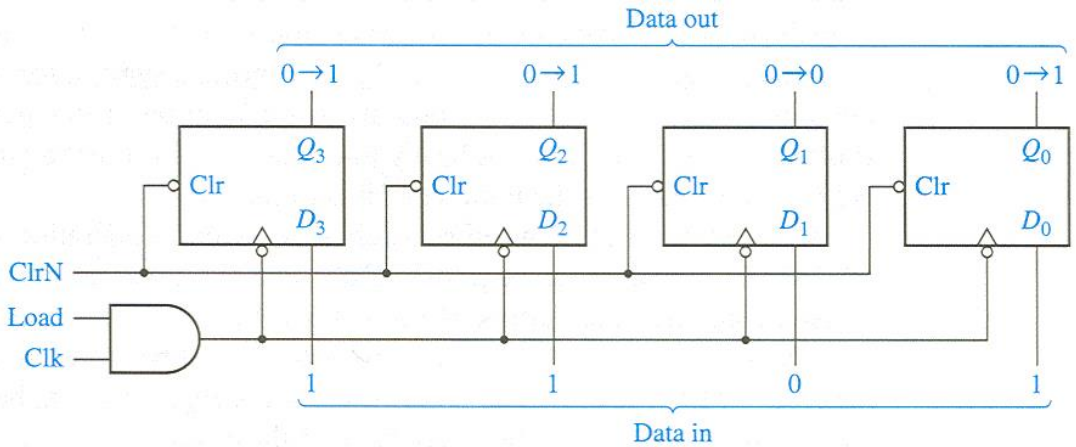

(a) Using gated clock

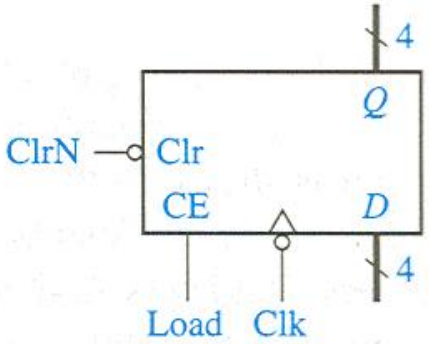

(c) Symbol

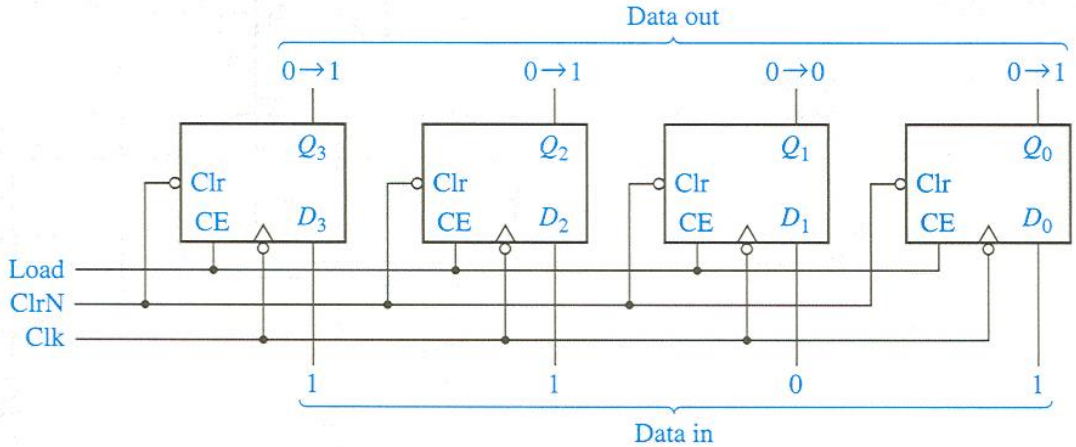

(b) With clock enable

➔When load=1 or CE=1, then, the data D is loaded (stored) in each FF at the falling edge.

➔When load=0, FFs hold their states.

Registers and Register Transfers (II)

Data transfer between registers:

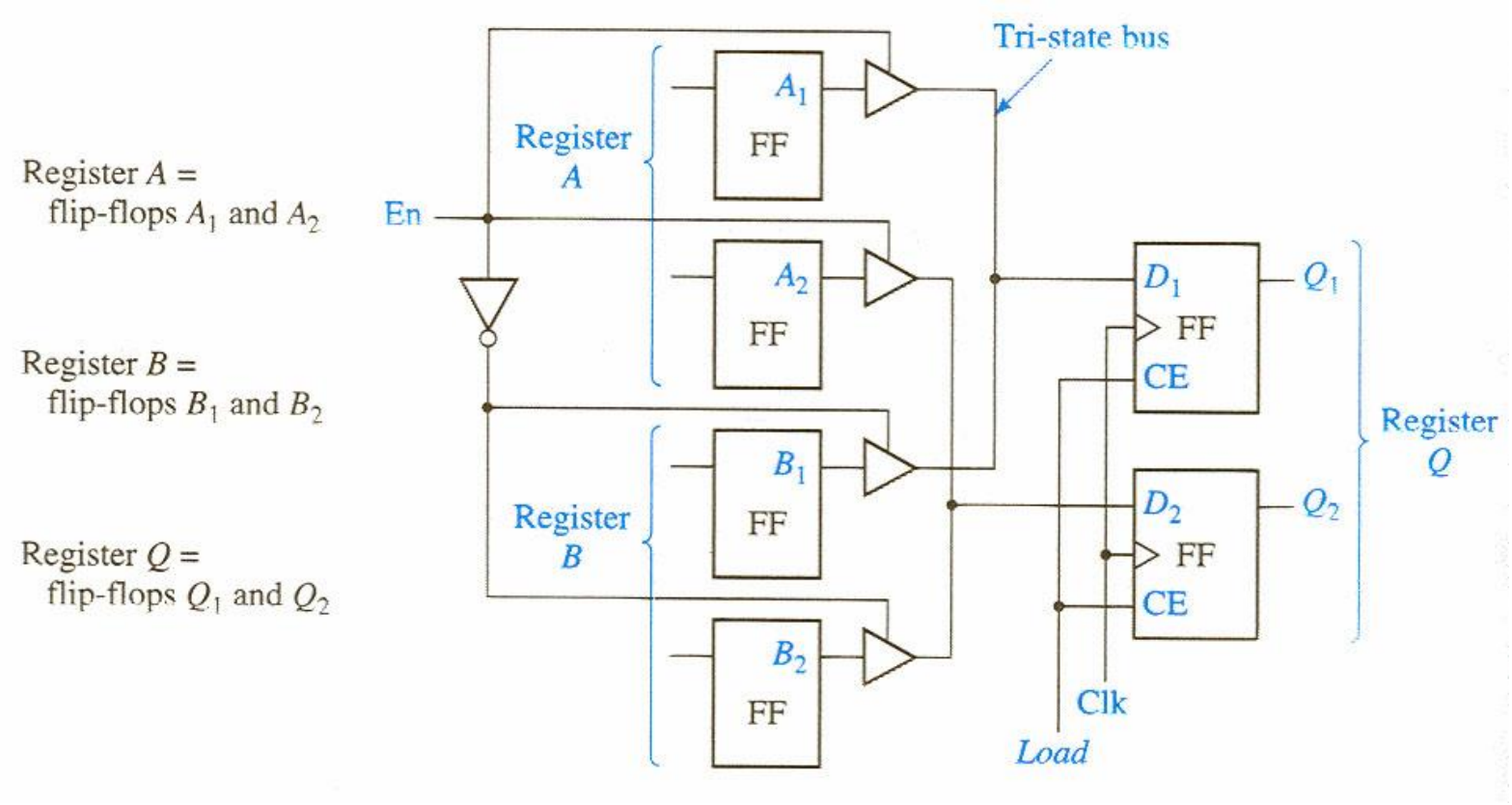

➔When En=1 and load(CE)=1, data of register A are transferred to register Q.

➔When En=0 and load(CE)=1, data of register B are transferred to register Q.

Registers and Register Transfers (III)

8 bits data transfer between registers using a decoder

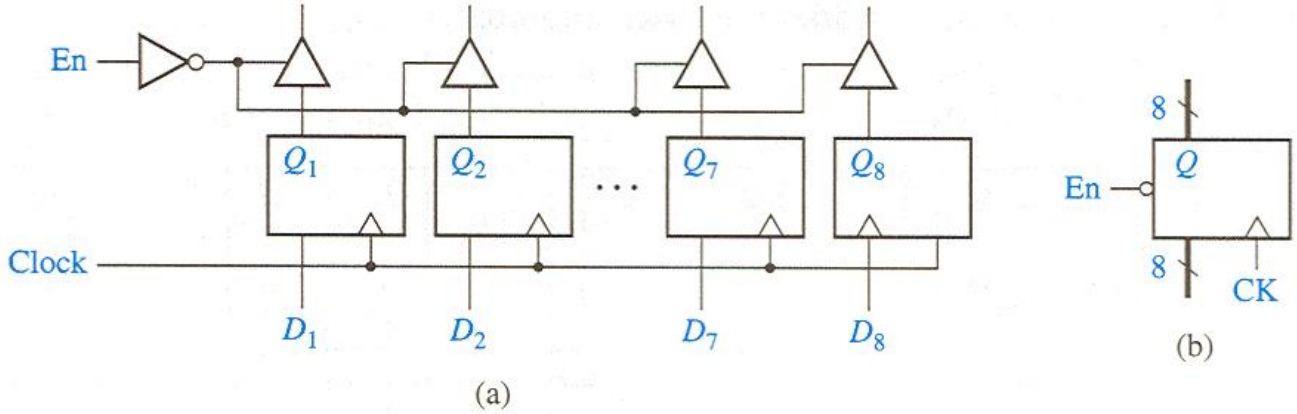

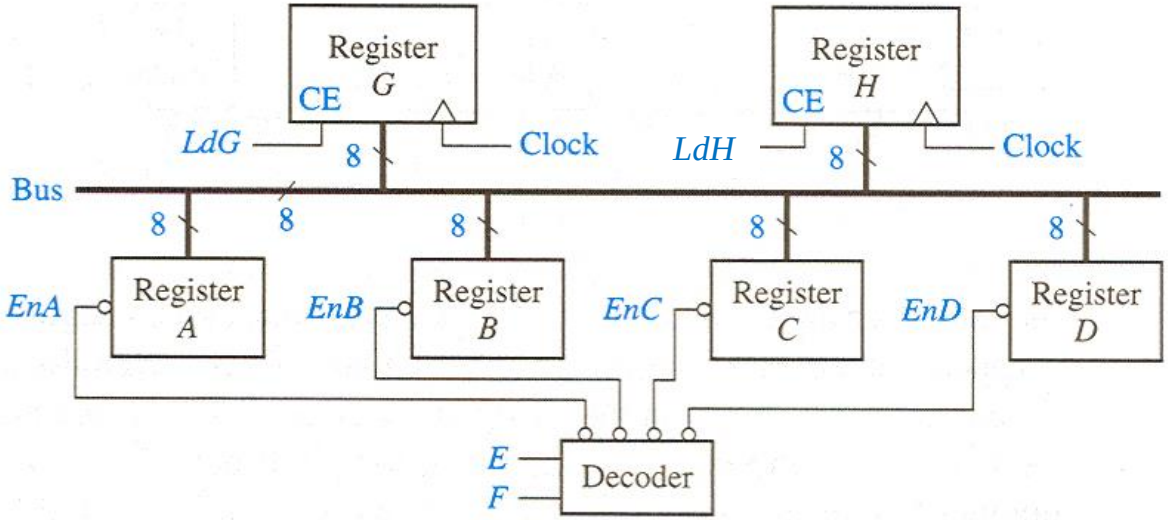

Parallel Adder with Accumulator

First store one number in the accumulator (register with FFs) and add the second number by the parallel adder.

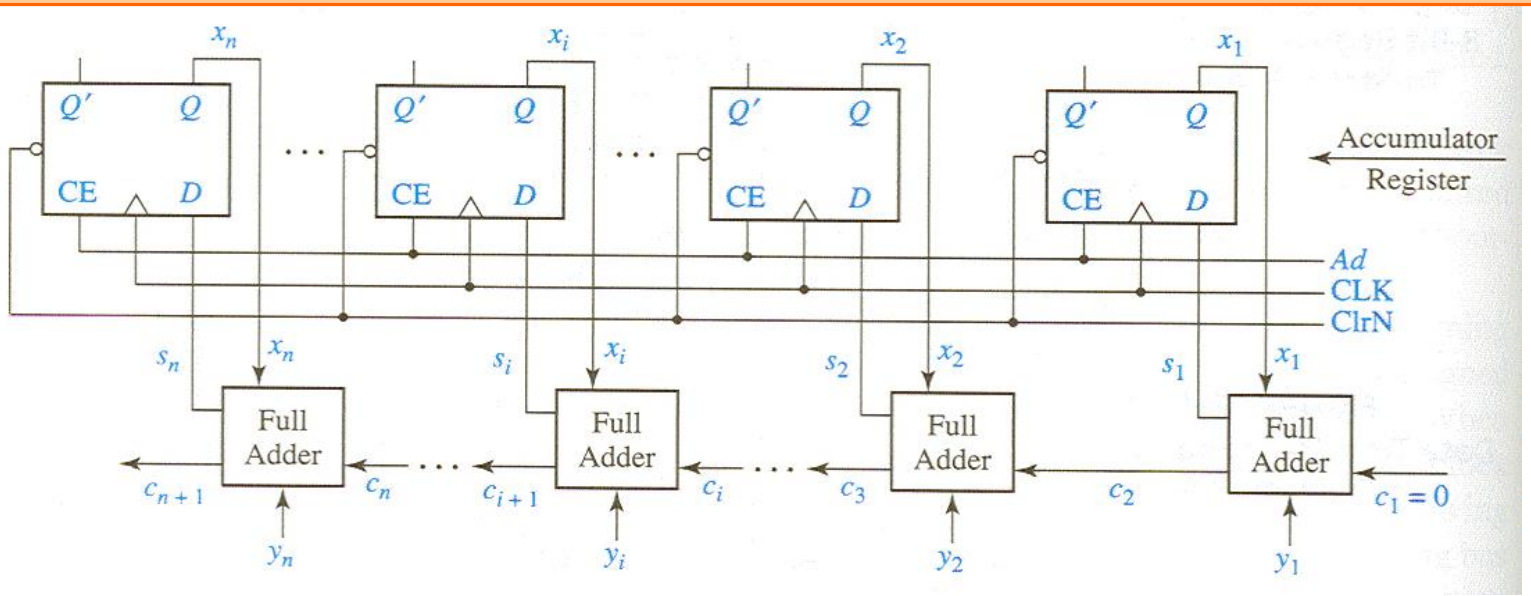

Adder cell with Multiplexer

Select first loading Y(or X) and add loaded data in FFs and input data

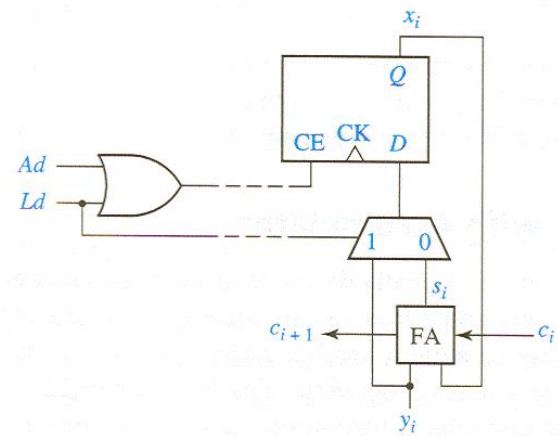

4-bit Register

- 74x175

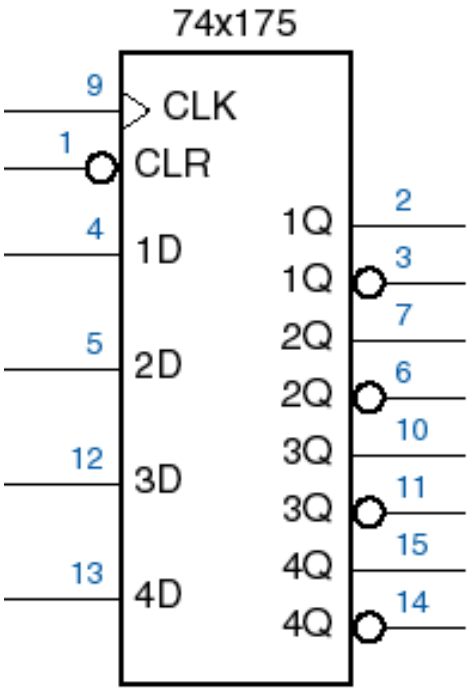

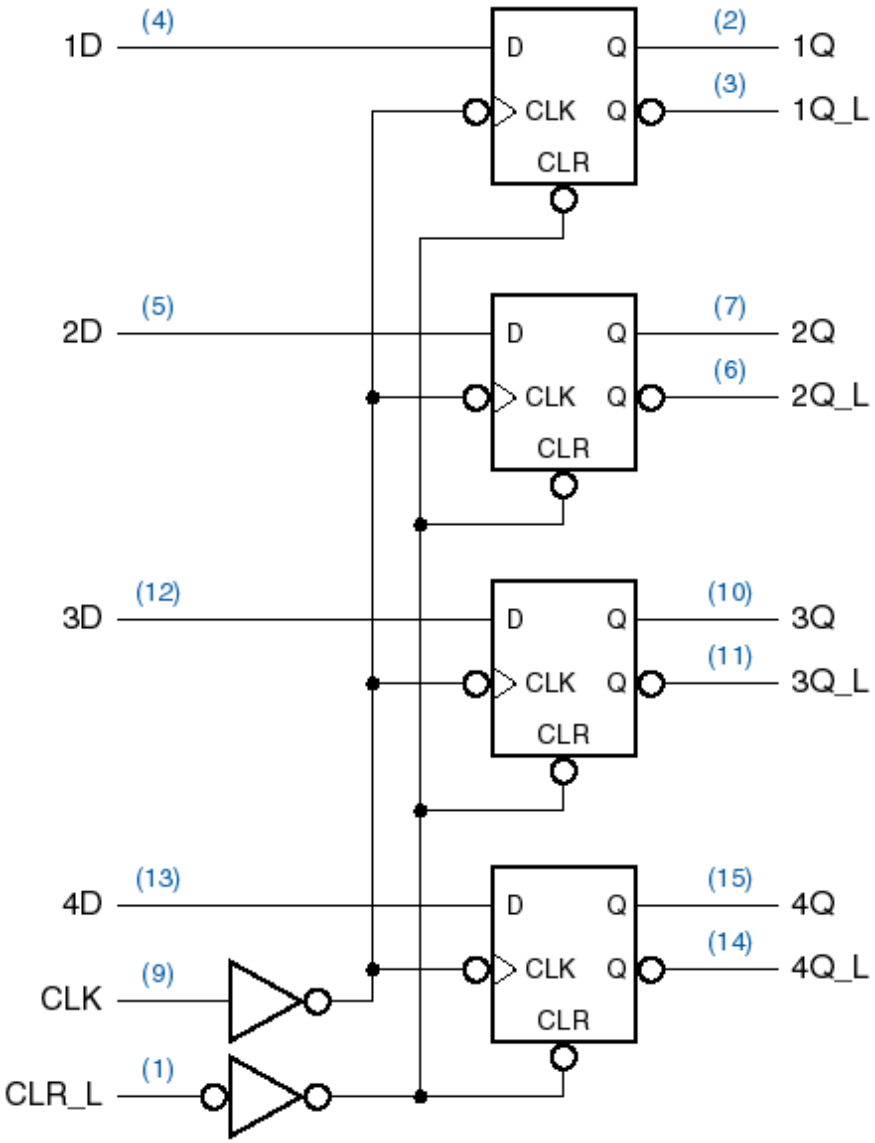

8-bit Register

- 74x374

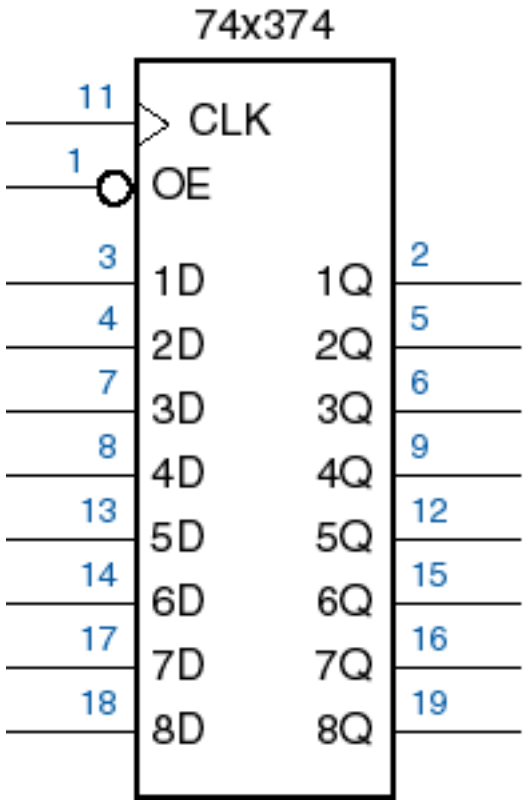

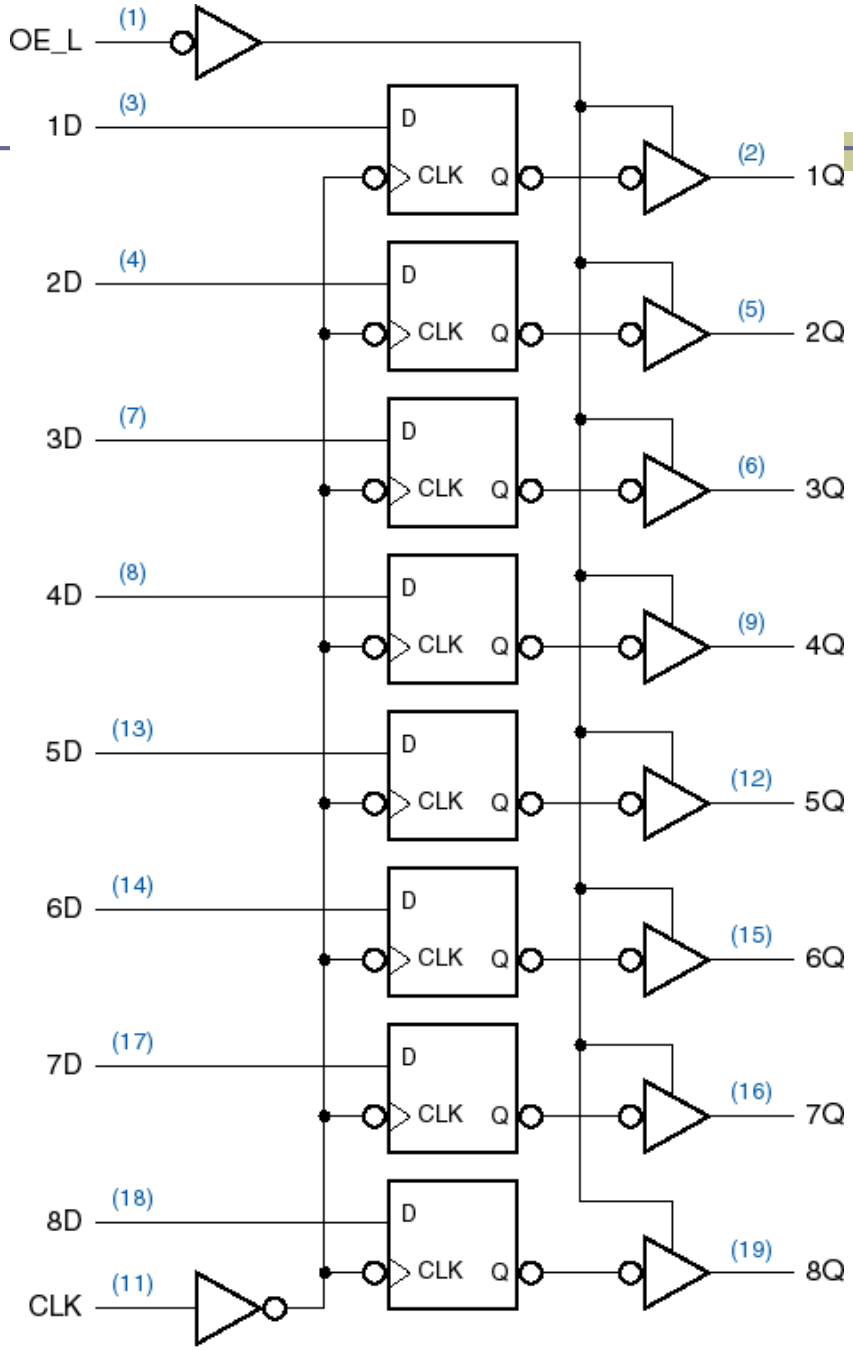

Shift Register (SI/SO)

- Bits are shifted to the left or right direction (Serial or cyclic types)

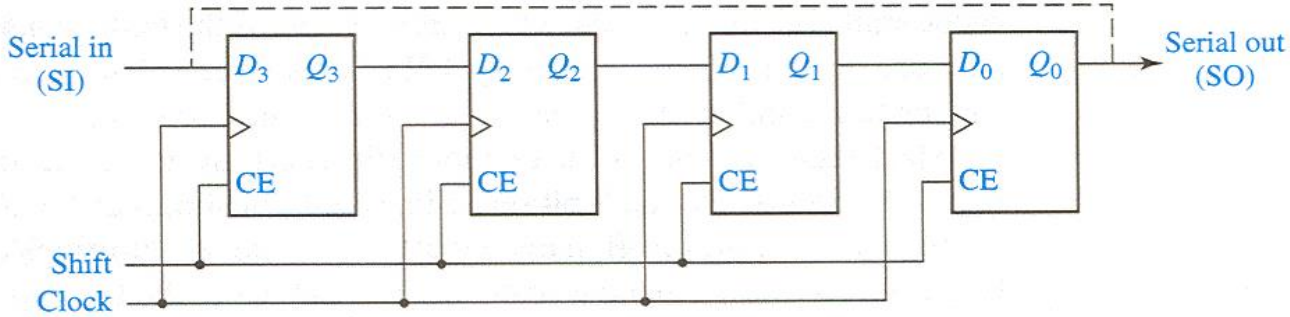

(a) Flip-flop connections

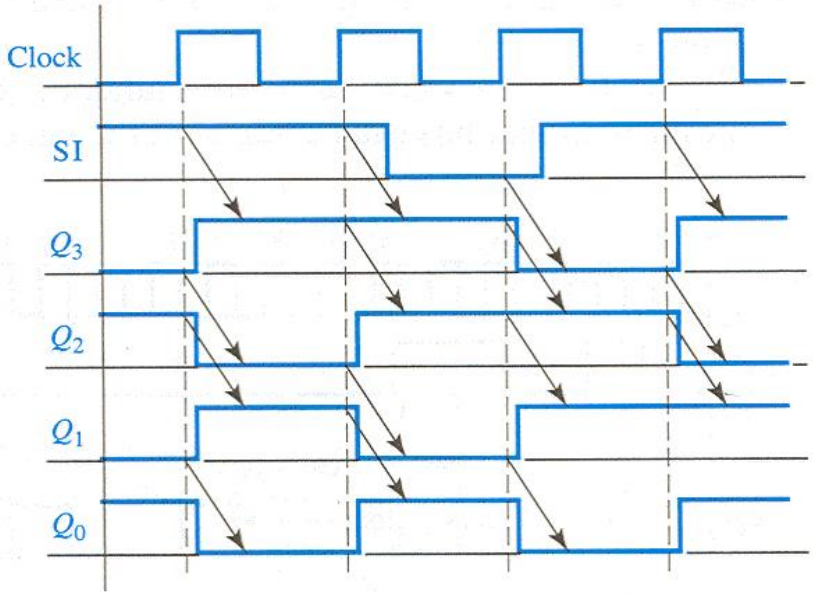

(b) Timing diagram

Shift Register (PI/PO) (I)

- Use MUXs for Q/data/SI according to Sh(shift) and L(load) control
- Serial inputs are shifted to the left or right direction.

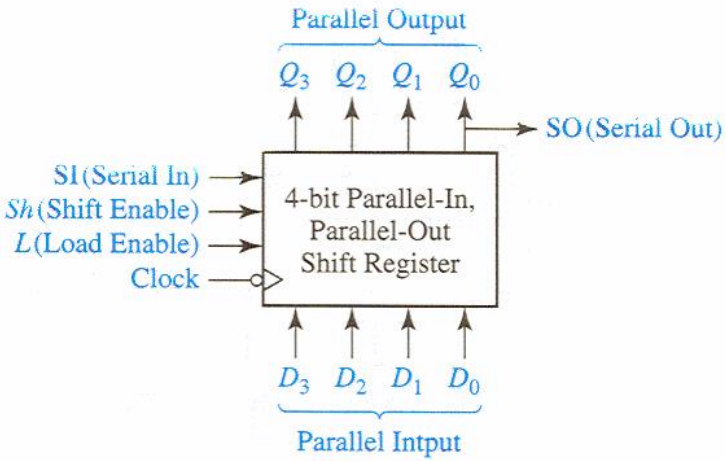

(a) Block diagram

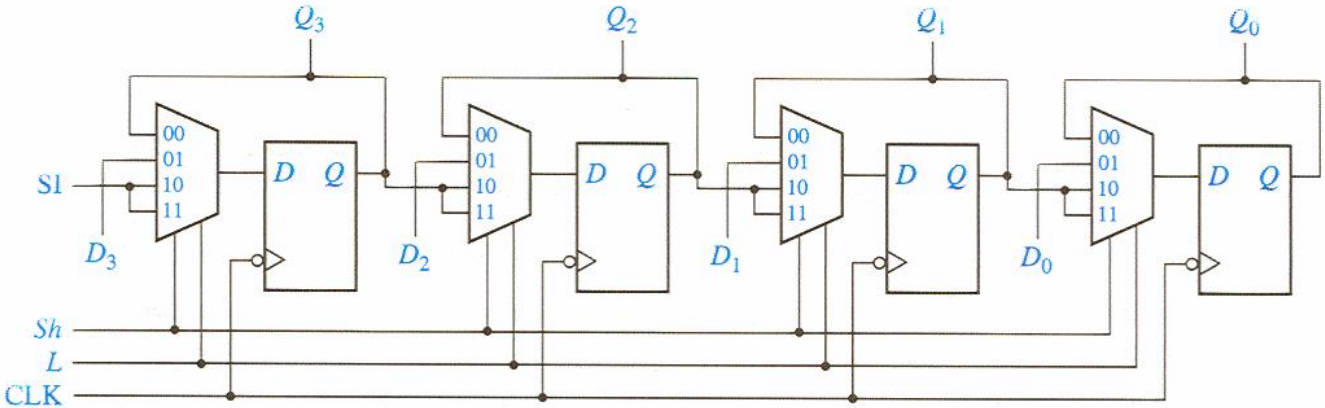

(b) Implementation using flip-flops and MUXes

Shift Register (PI/PO) (II)

- Parallel in, parallel out implementation using MUXs

Inputs		Next state				Action
Sh	L	Q_3^+	Q_2^+	Q_1^+	Q_0^+	
0	0	Q_3	Q_2	Q_1	Q_0	no change
0	1	D_3	D_2	D_1	D_0	load
1	x	SI	Q_3	Q_2	Q_1	right shift

$$Q_3^+ = Sh' \cdot L' \cdot Q_3 + Sh' \cdot L \cdot D_3 + Sh \cdot SI$$

$$Q_2^+ = Sh' \cdot L' \cdot Q_2 + Sh' \cdot L \cdot D_2 + Sh \cdot Q_3$$

$$Q_1^+ = Sh' \cdot L' \cdot Q_1 + Sh' \cdot L \cdot D_1 + Sh \cdot Q_2$$

$$Q_0^+ = Sh' \cdot L' \cdot Q_0 + Sh' \cdot L \cdot D_0 + Sh \cdot Q_1$$

Shift Register (PI/PO) (III)

- Convert parallel data into serial data by serial out (SO)

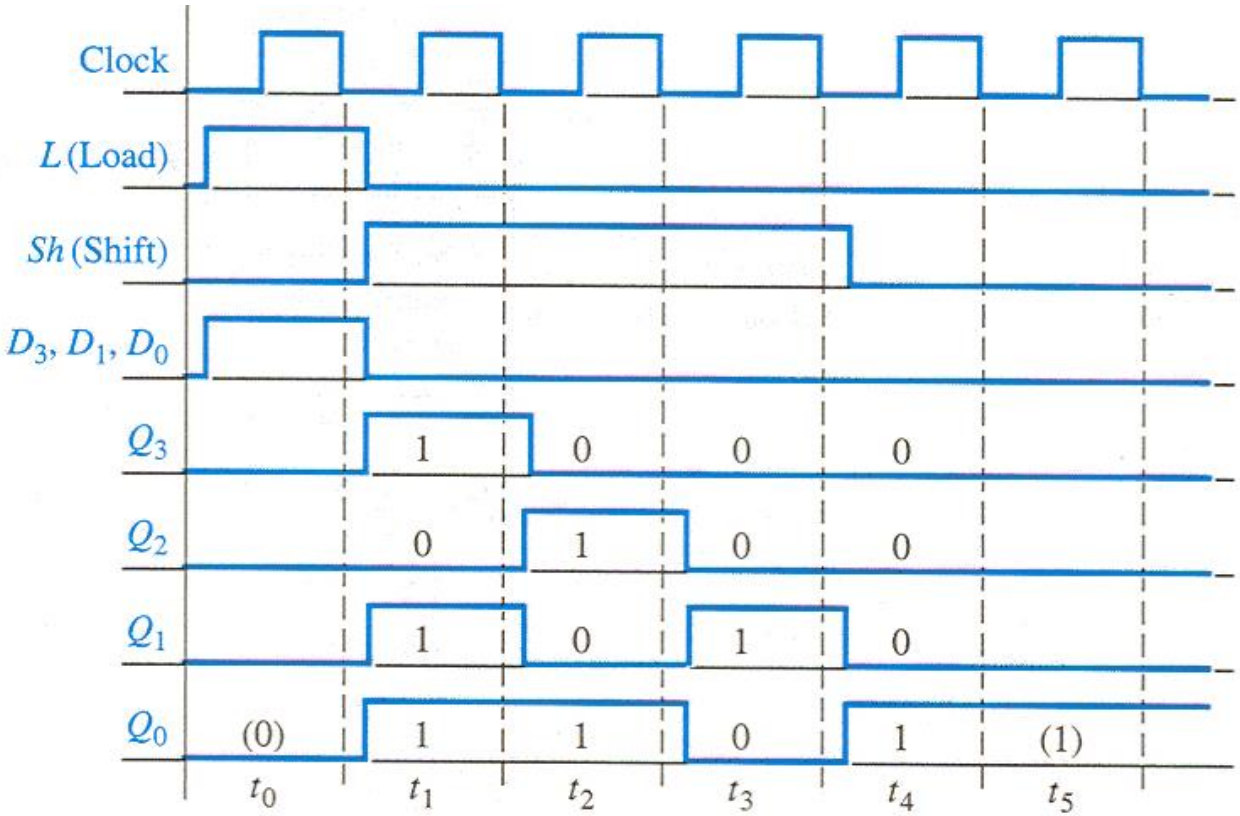

SI=0

$D_3D_2D_1D_0$=1011

Sh=1 (t_1 , t_3) for SO

Serial-to-Parallel Conversion

- Use a serial-in, parallel-out shift register

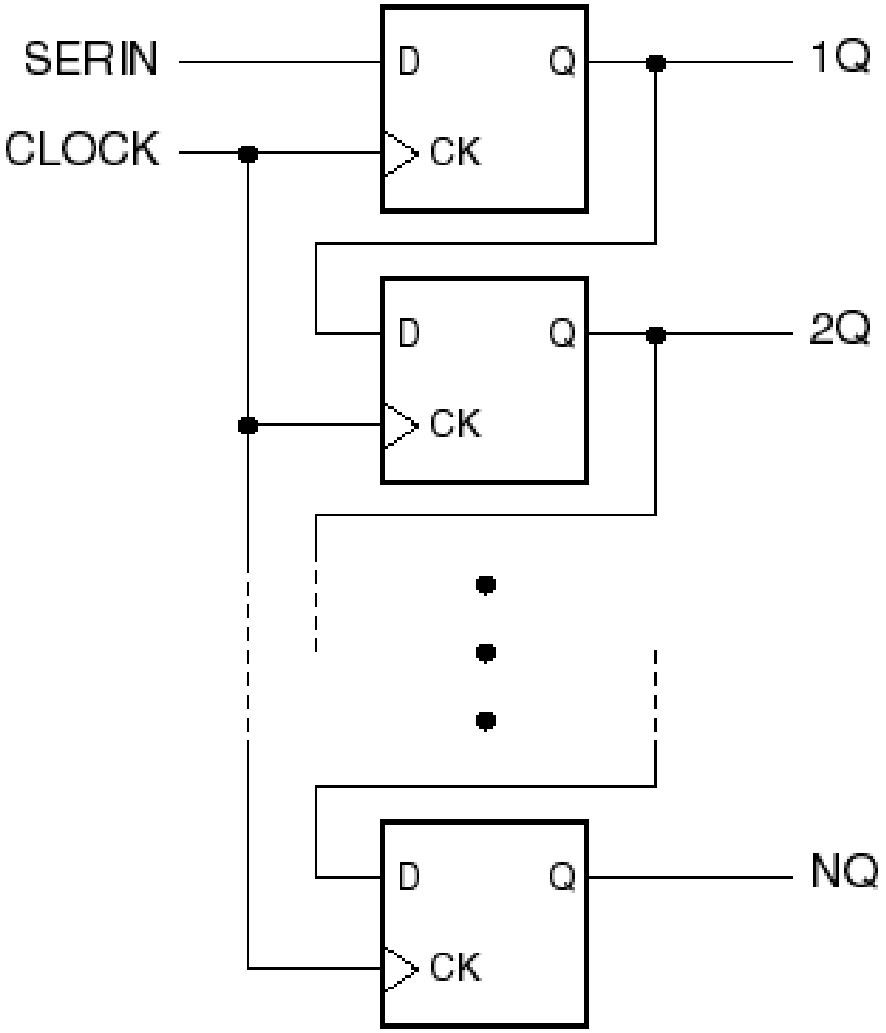

Parallel-to-Serial Conversion

- Use parallel-in, serial-out shift register
- Connect previous output to next input

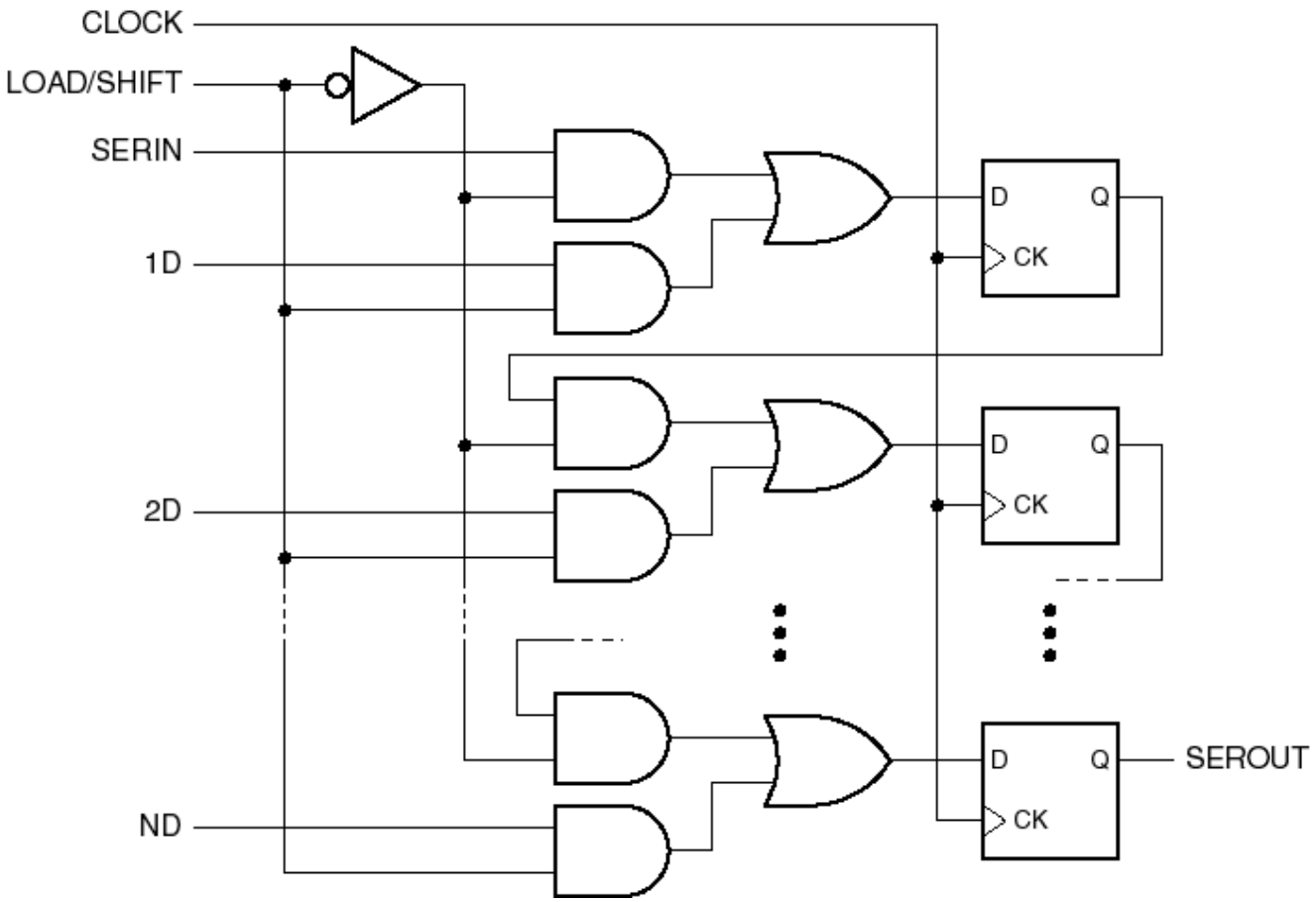

Shift Register with Feedback

- Shift register with inverted feedback
- Successive states transition (state graph)
- A circuit that cycles through a fixed sequence of states is called *counter* .
  - Johnson counter to have negative feedback

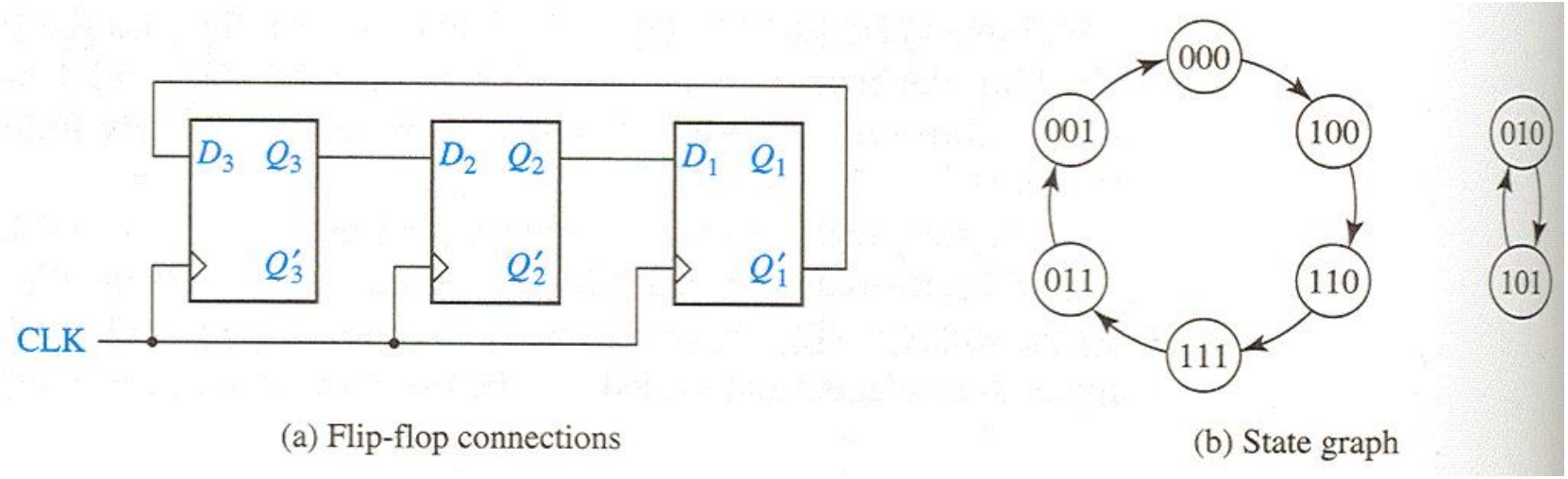

(a) Flip-flop connections (b) State graph

When initial state $D_3D_2D_1$=000,

there are no states 010 and 101