디지털 논리

Clocked Sequential Circuits

이 상 화

Introduction

- States in the sequential circuits
  - Digital values of FF's
- States change at active (falling or rising) CLK edges
  - States are stable in other CLK duration
- Circuit design
  - Finding input circuits of FF's using current states of FFs and input variables based on the state graph and table
  - Finding output circuits using current states of FFs and input variables
    - Ex: counter output: states of FFs

Parity Checker (I)

Parity checker: checking the number of 1's is even or odd

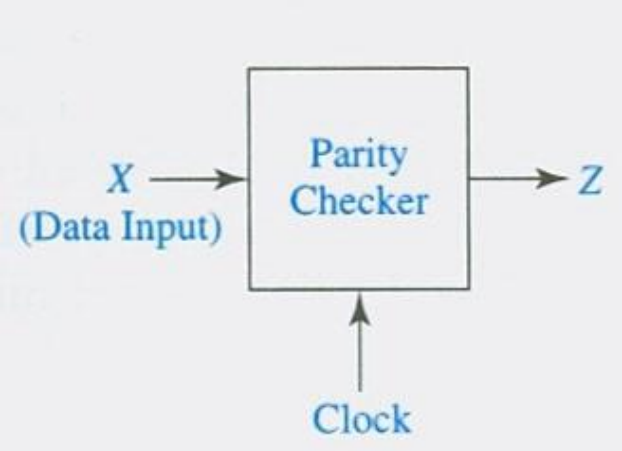

X: input bit
Z: output of parity checker

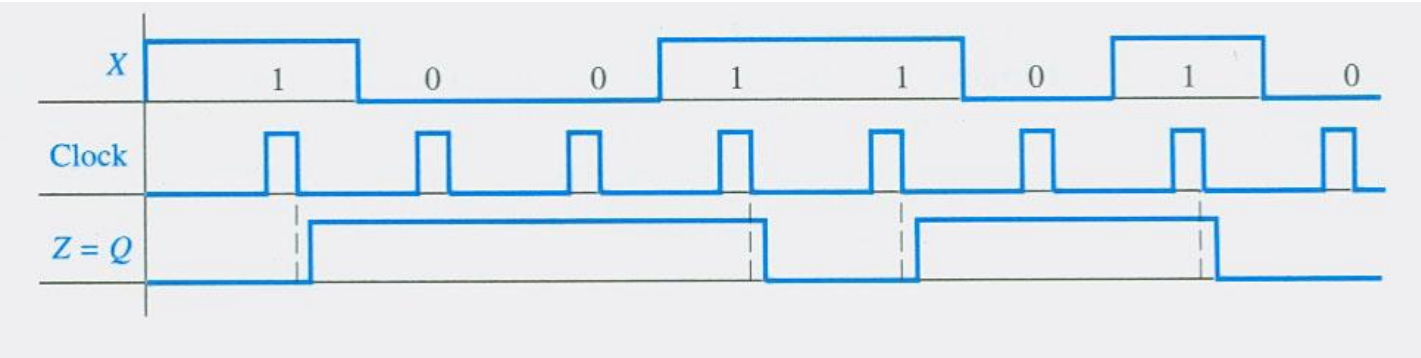

Odd parity: Z=1, if the number of 1's is odd

Parity Checker (II)

State graph: showing state transition

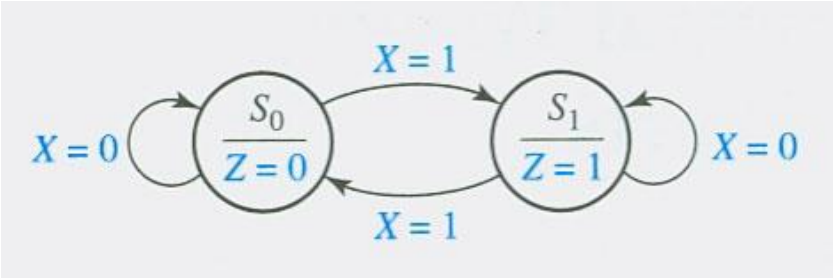

State table

Present State	Next State $X = 0$	Next State $X = 1$	Present Output
S_0	S_0	S_1	0
S_1	S_1	S_0	1

Q	Q^+ $X = 0$	Q^+ $X = 1$	T $X = 0$	T $X = 1$	Z
0	0	1	0	1	0
1	1	0	0	1	1

Implementation using T FF

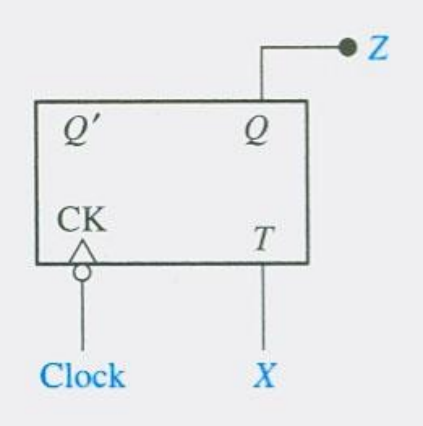

Two types of Sequential Circuits

- Sequential Circuit => state machine
- **Moore** machine
  - Outputs depend only on the present states of FFs.
  - Outputs change only at active CLK edges (falling or rising).
- **Mealy** machine
  - Outputs depend both on the present states of FFs and the inputs.
  - Outputs change whenever the inputs vary or at CLK edges (falling or rising)
    - Incorrect outputs occur between active edges.

Ex: Moore Machine

Outputs (z) are not directly connected with input (x).

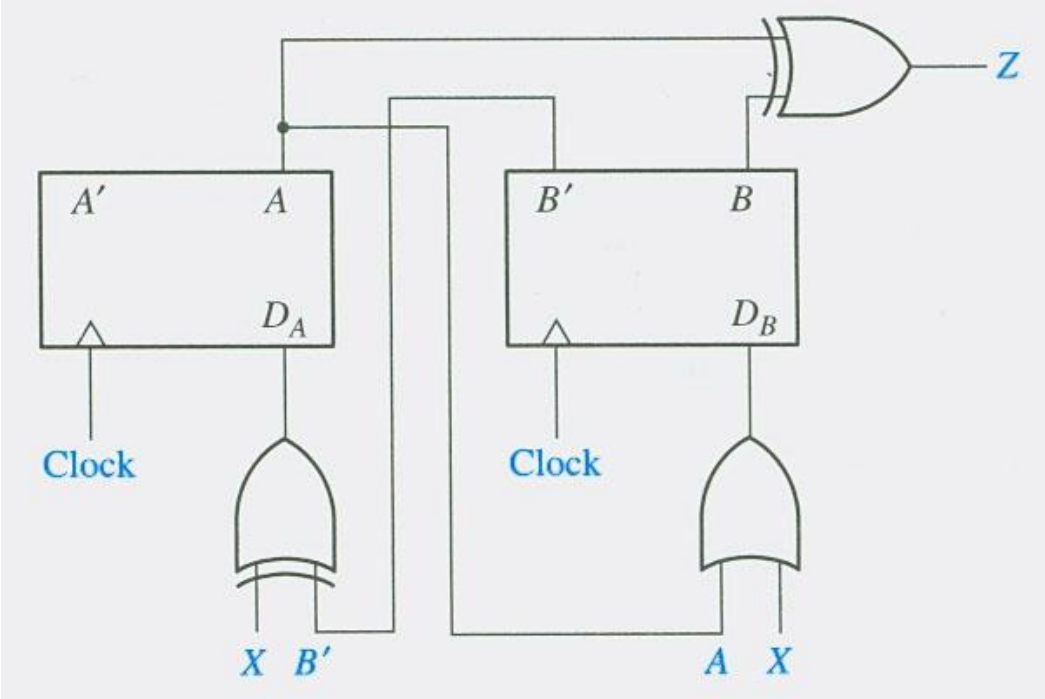

➔Z changes only at the actives edges.

➔States (A and B) changes at the active edges since they are the outputs of FF's

Ex: Mealy Machine

Outputs (z) are directly connected with input (x).

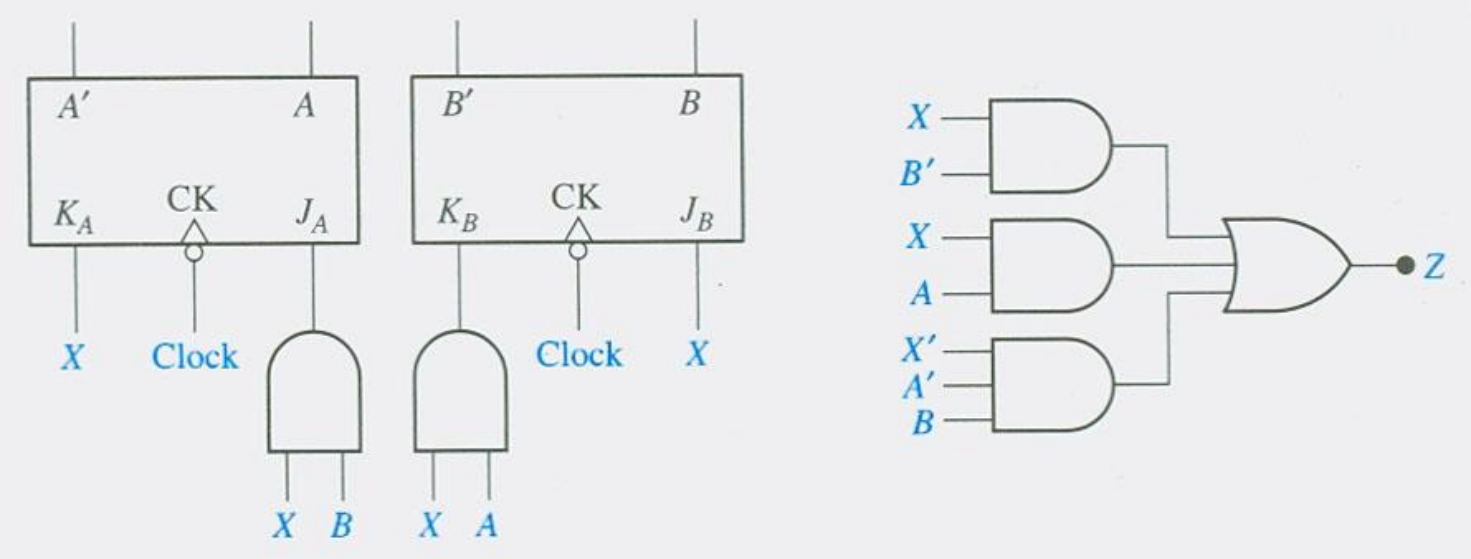

➔Z changes when the input (x) varies.

➔States (A and B) changes at the active edges.

➔Unexpected false outputs may occur, but they are corrected at the active edges.

State Table

Given a sequential circuit, **state table** specifies the next states and outputs in terms of the present states and inputs.

State: combination of FF's outputs (S_0, S_1, …)

- Procedure of state table
  1. Determine the equations of FF's inputs and output.
  2. Derive next state equation for each FF using FF's operation(Ex: D FF: $Q^+=D$, J-K FF: $Q^+=JQ'+K'Q$)
  3. Plot a next state map for each FF.
  4. Combine these maps to form the state table.

Ex: State Table of Moore Machine (I)

- Ex: state table of Moore machine

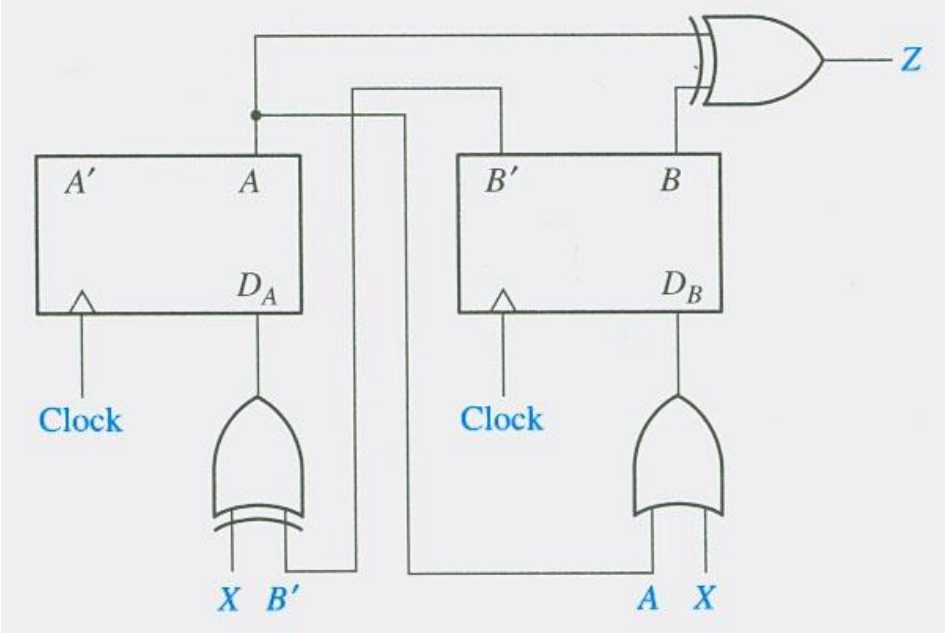

Moore circuit

AB \ X	0	1
00	1	0
01	0	1
11	0	1
10	1	0

A^+

AB \ X	0	1
00	0	1
01	0	1
11	1	1
10	1	1

B^+

State maps

Ex: State Table of Moore Machine (II)

- state table: one output for each state

AB	A^+B^+ $X=0$	$X=1$	Z
00	10	01	0
01	00	11	1
11	01	11	0
10	11	01	1

Present State	Next State $X=0$	$X=1$	Present Output (Z)
S_0	S_3	S_1	0
S_1	S_0	S_2	1
S_2	S_1	S_2	0
S_3	S_2	S_1	1

- state graph

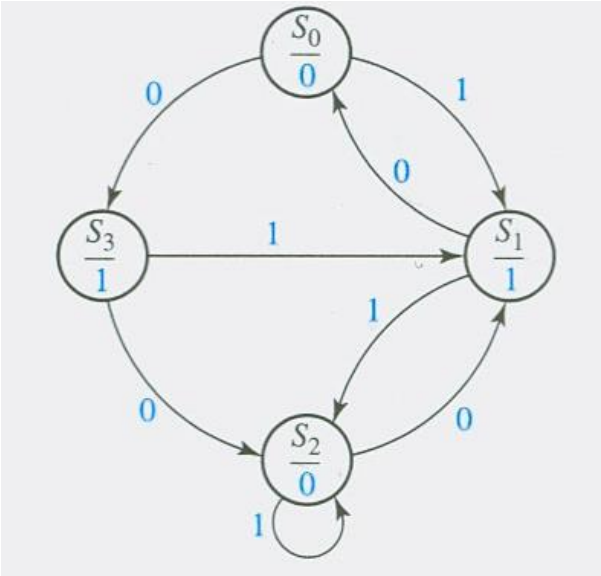

AB \ X	0	1
00	1	0
01	0	1
11	0	1
10	1	0

A^+

AB \ X	0	1
00	0	1
01	0	1
11	1	1
10	1	1

B^+

Ex: State Table of Mealy Machine (I)

- Ex: state table of Mealy machine

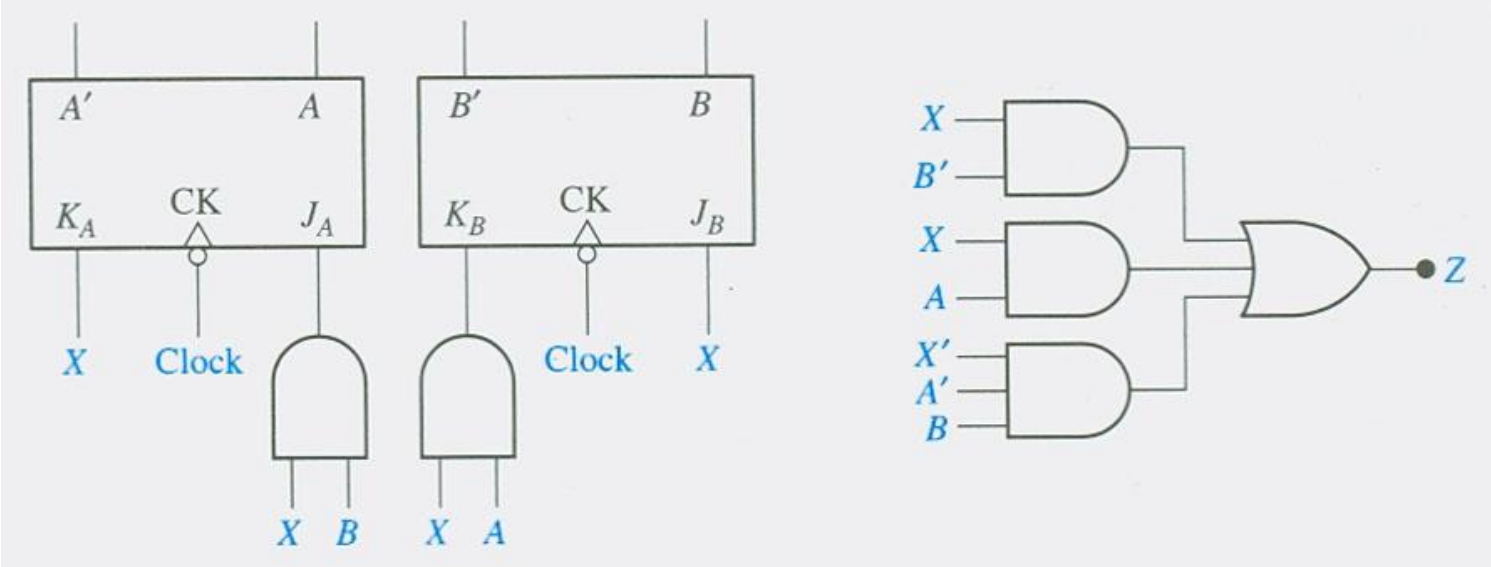

AB \ X	0	1
00	0	0
01	0	1
11	1	0
10	1	0

A^+

AB \ X	0	1
00	0	1
01	1	1
11	1	0
10	0	1

B^+

AB \ X	0	1
00	0	1
01	1	0
11	0	1
10	0	1

Z

Ex: State Table of Mealy Machine (II)

- Mealy machine: two outputs for each state in terms of input x (0 or 1)
- State transition is indicated by an arc with input/output values

AB \ X	0	1
00	0	0
01	0	1
11	1	0
10	1	0

A^+

AB \ X	0	1
00	0	1
01	1	1
11	1	0
10	0	1

B^+

AB \ X	0	1
00	0	1
01	1	0
11	0	1
10	0	1

Z

State maps for each FF's output

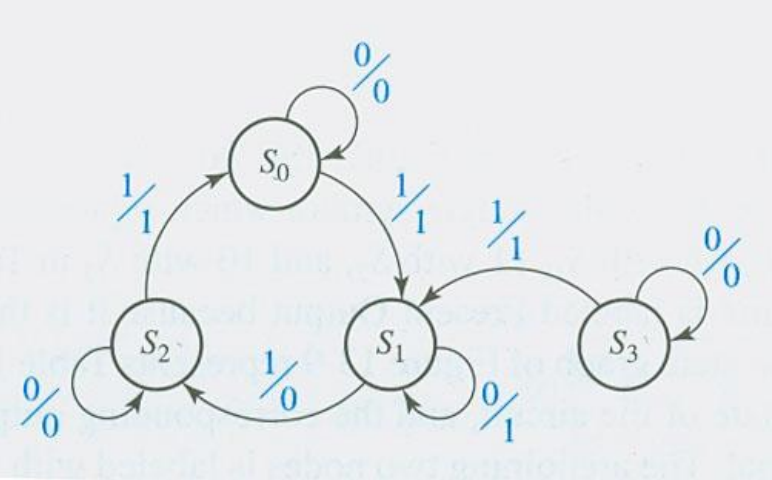

State graph

(a)

AB	A^+B^+ X = 0	1	Z X = 0	1
00	00	01	0	1
01	01	11	1	0
11	11	00	0	1
10	10	01	0	1

(b)

Present State	Next State X = 0	1	Present Output X = 0	1
S_0	S_0	S_1	0	1
S_1	S_1	S_2	1	0
S_2	S_2	S_0	0	1
S_3	S_3	S_1	0	1

Ex: Multi-inputs and Multi-outputs

- State table

Present State	Next State $X_1X_2 = 00$	01	10	11	Present Output (Z_1Z_2) $X_1X_2 = 00$	01	10	11
S_0	S_3	S_2	S_1	S_0	00	10	11	01
S_1	S_0	S_1	S_2	S_3	10	10	11	11
S_2	S_3	S_0	S_1	S_1	00	10	11	01
S_3	S_2	S_2	S_1	S_0	00	00	01	01

- State graph

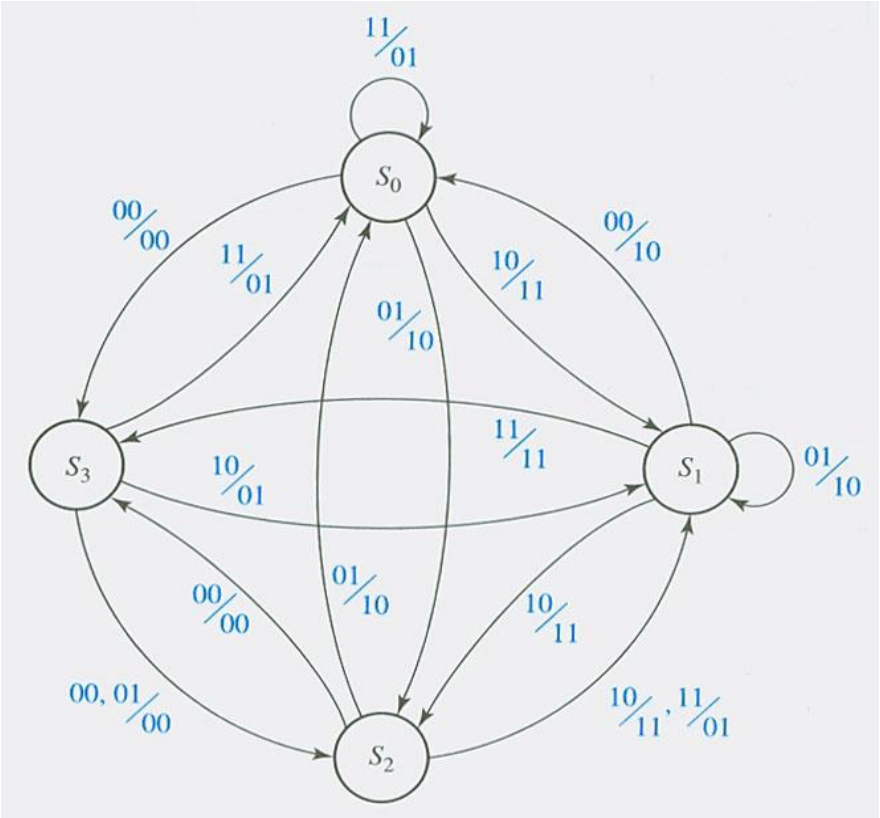

General Sequential Circuits (I)

- A general model of Moore machine

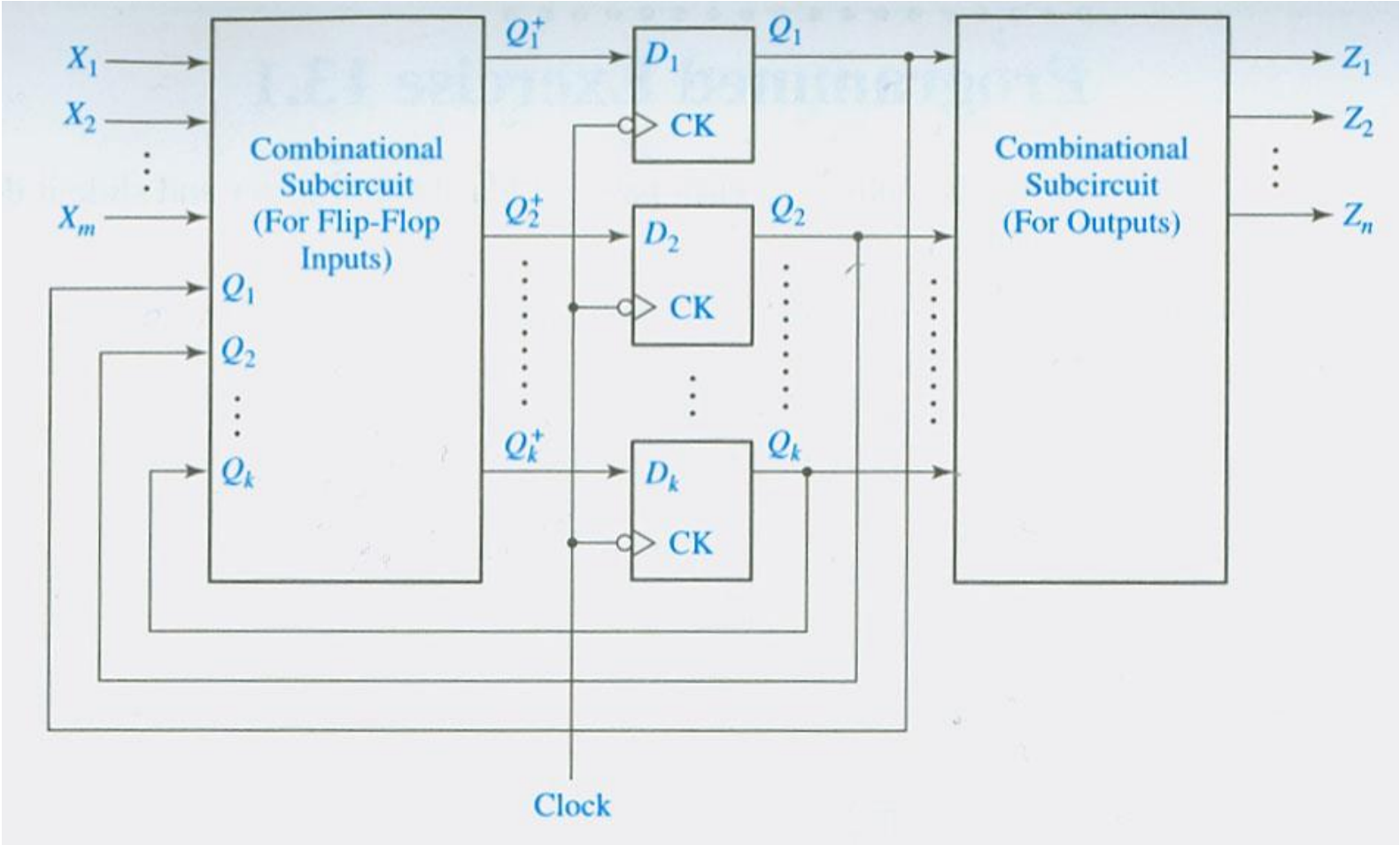

General Sequential Circuits (II)
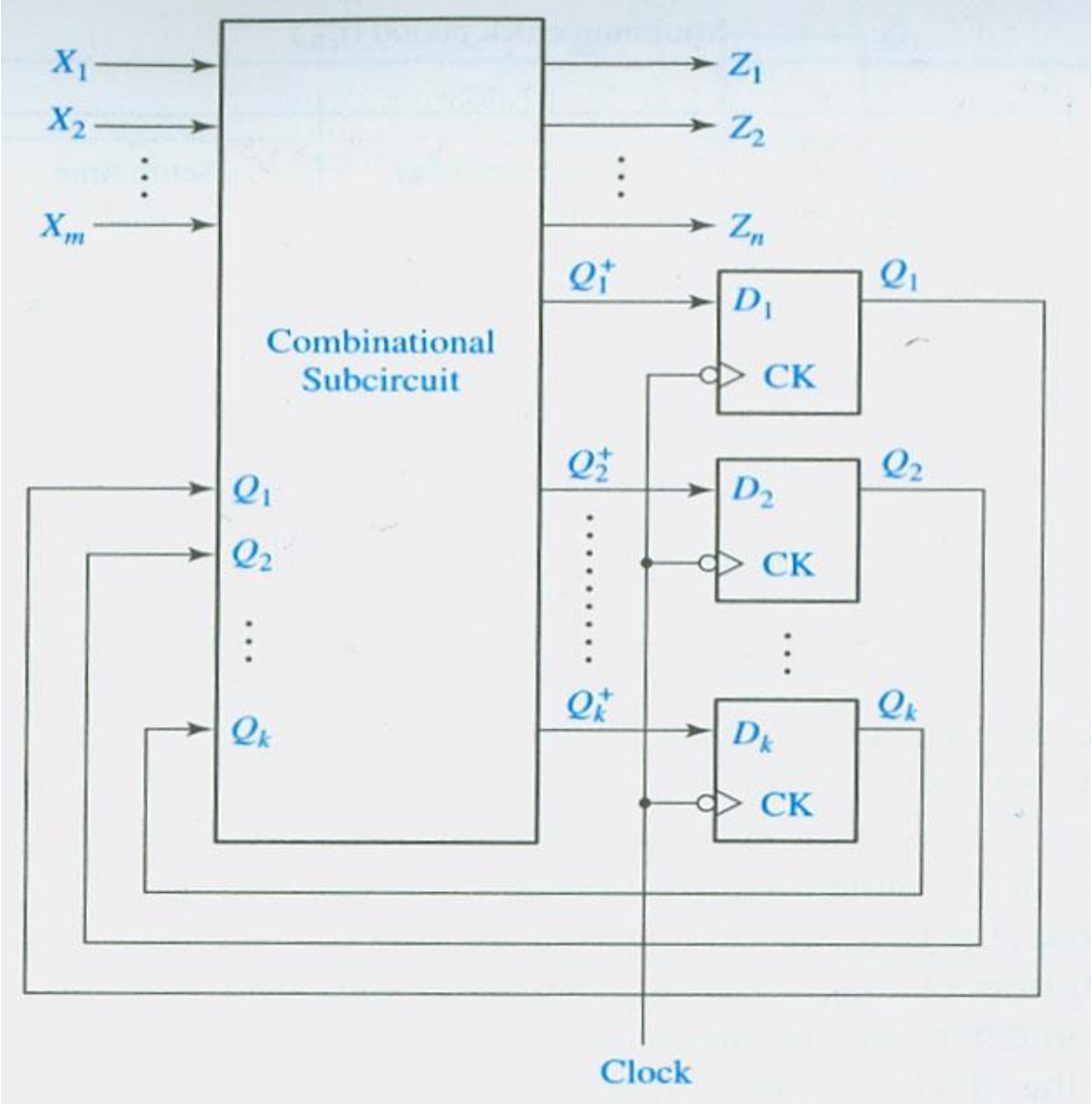
- A general model of Mealy machine