디지털 논리 (겨울학기)

HW#2 Problems

Due: 2024년 1월 15일 (월) 09:00

Report Submission

- Solve the problems as shown in the next pages.
- Submit your **handwritten** report at the lecture time
  - PDA 등으로 작성하여 인쇄한 경우도 인정하지 않음.)Printed version is not allowed.)
  - Only handwritten report is allowed.
  - 2024년 1월 15일 (월요일) 오전 9시 강의실에서 제출

12.7 Design a 3-bit counter which counts in the sequence:
001, 011, 010, 110, 111, 101, 100, (repeat) 001, . . .

(a) Use D flip-flops.

(b) Use T flip-flops.

In each case, what will happen if the counter is started in state 000?

12.17 Design a decade counter which counts in the sequence:
0000, 0001, 0010, 0011, 0100, 0101, 0110, 0111, 1000, 1001, 0000, . . .

(a) Use D flip-flops.

(b) Use J-K flip-flops.

(a) and (c), not (b)

13.8 (a) Construct a transition table and state graph for the circuit shown.
(b) Construct a timing chart for the input sequence $X = 10101$. (Assume that initially $Q_1 = Q_2 = 0$ and that X changes midway between the rising and falling clock edges.) Indicate the times Z has the correct value.
(c) List the output values produced by the input sequence.

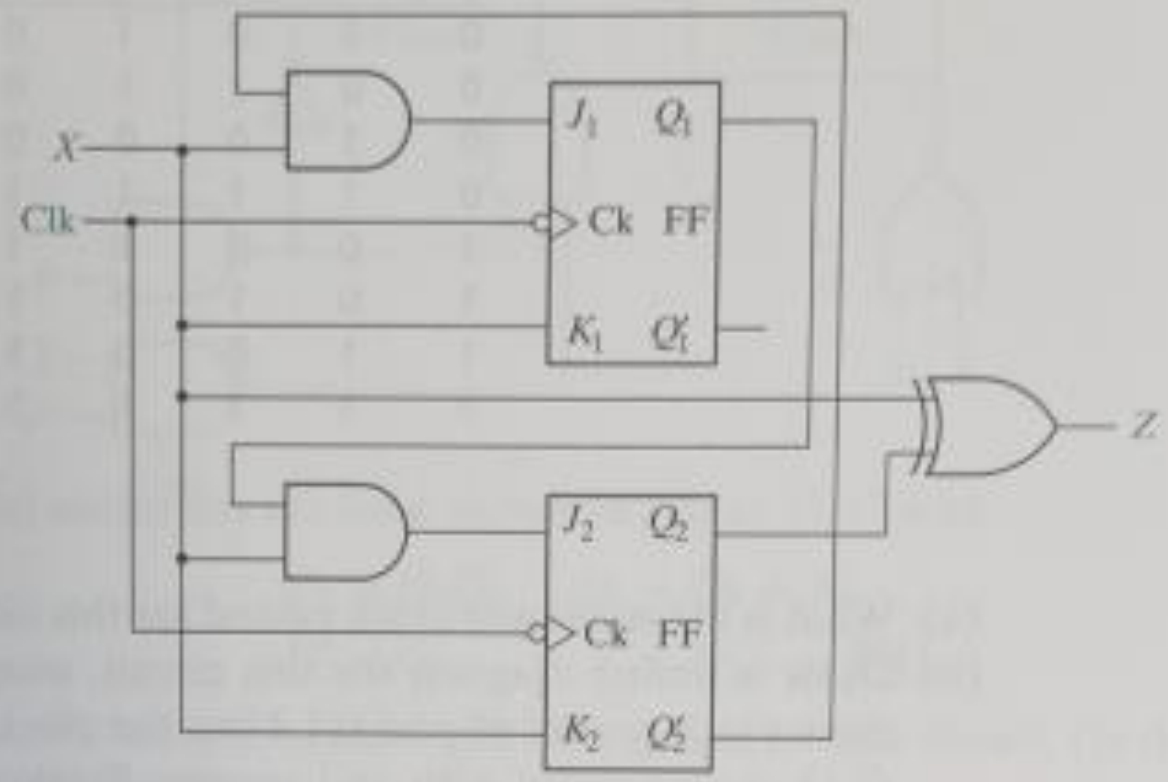

(a) and (c), not (b)
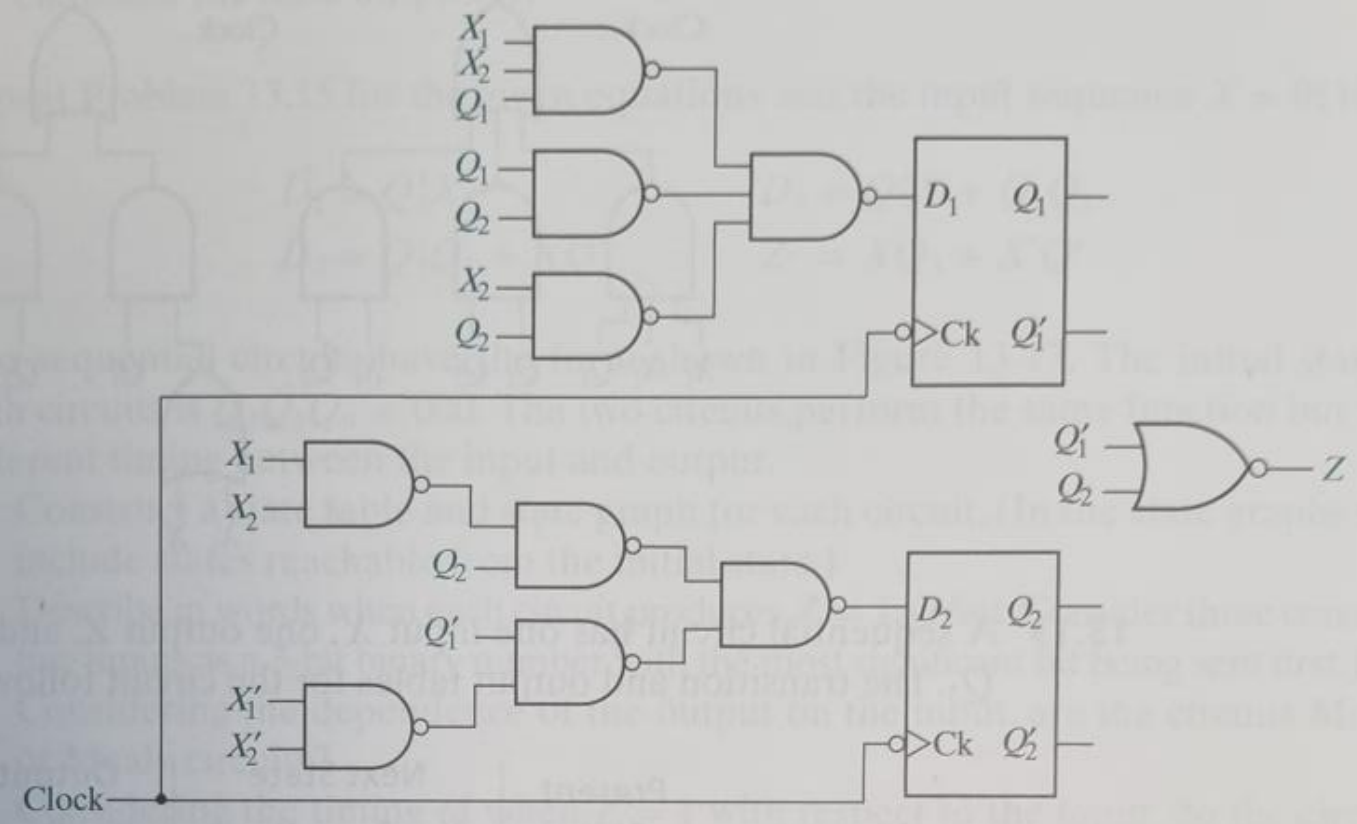
13.10 (a) Construct a transition table and state graph for the circuit shown.
(b) Construct a timing chart for the input sequence $X_1X_2 = 01, 10, 01, 11, 11, 01$. (Assume that initially $Q_1 = Q_2 = 0$ and that X_1 and X_2 change midway between the rising and falling clock edges.)
(c) List the output values produced by the input sequence.