2023년 겨울학기

Digital Logic Design – Boolean Algebra (I)

이 상 화

Objectives

Understand the basic operations and laws of Boolean algebra

- Relate **Boolean algebra** to AND/OR/NOT logic gates and switches
- Prove these laws using a truth table
- Manipulation of algebraic expression
  - Multiplying out (전개)
  - Factoring (인수분해)
  - Simplifying (단순화)
  - Complement of an expression (부정)

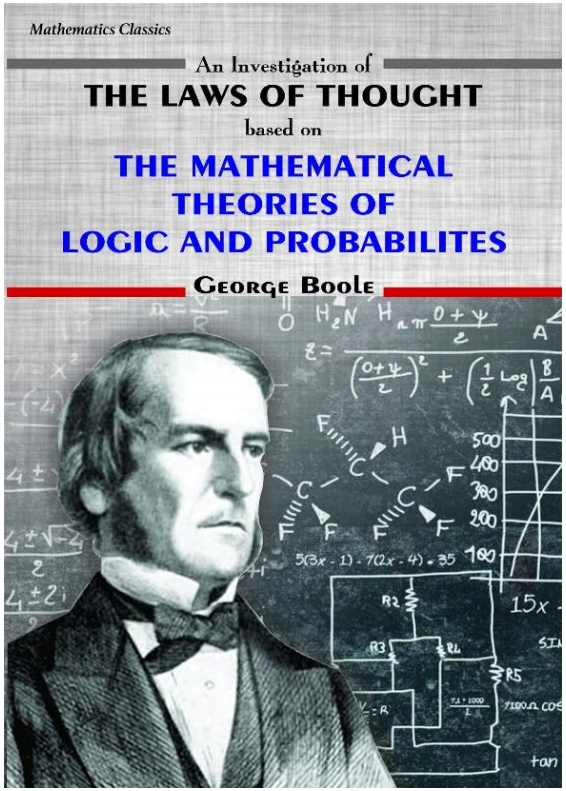

Boolean algebra

- “switching algebra” (two-state, two-value)
  - deals with Boolean values -- 0, 1
- Positive-logic convention
  - analog voltages LOW, HIGH --> 0, 1
  - Not binary number (high/low voltage)
    - Logical symbol: F(0), T(1)
  - Negative logic -- seldom used
- Signal values denoted by variables (X, Y, Z etc.)

Boolean operators

- Complement (Not): X′ (opposite of X)
- AND: XY
- OR: X + Y

<Operation table: Same with the logical operations in programming>

X	Y	X AND Y
0	0	0
0	1	0
1	0	0
1	1	1

X	Y	X OR Y
0	0	0
0	1	1
1	0	1
1	1	1

X	NOT X
0	1
1	0

Basic operations - NOT

NOT (Inverter)

$$0' = 1 \qquad \text{and} \qquad 1' = 0$$

$$X' = 1 \quad \text{if} \quad X = 0 \qquad \text{and} \qquad X' = 0 \quad \text{if} \quad X = 1$$

Gate Symbol

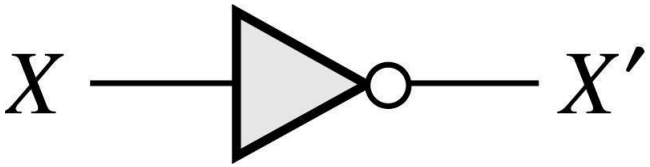

Basic operations - AND

AND

$$0 \cdot 0 = 0 \qquad 0 \cdot 1 = 0 \qquad 1 \cdot 0 = 0 \qquad 1 \cdot 1 = 1$$

Truth Table

A B	C = A · B
0 0	0
0 1	0
1 0	0
1 1	1

Gate Symbol

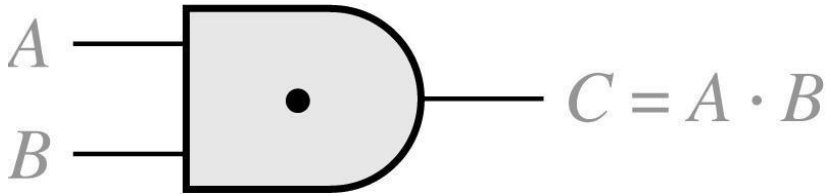

Basic operations - OR

OR

$$0+0=0 \qquad 0+1=1 \qquad 1+0=1 \qquad 1+1=1$$

Truth Table

A B	C = A + B
0 0	0
0 1	1
1 0	1
1 1	1

Gate Symbol

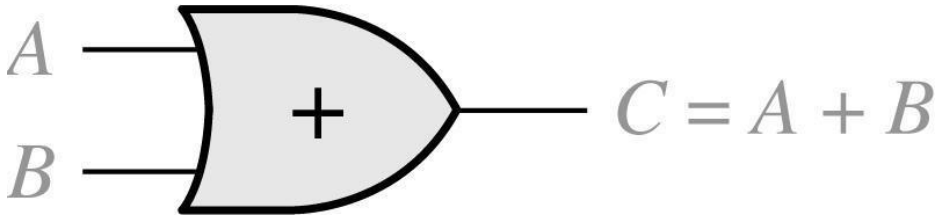

Switch and Boolean operations

Apply to Switch

$X = 0 \rightarrow$ switch open
$X = 1 \rightarrow$ switch closed

AND $T = A \cdot B$ (series/cascaded connection)

OR $T = A + B$ (parallel connection)

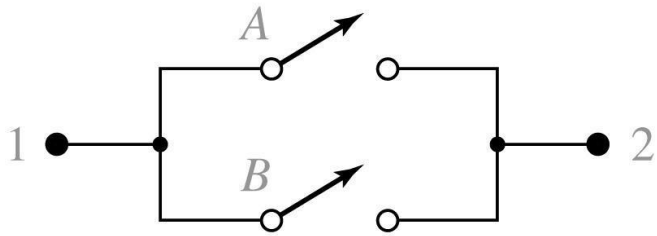

Digital Logic Operation

- Timing diagram

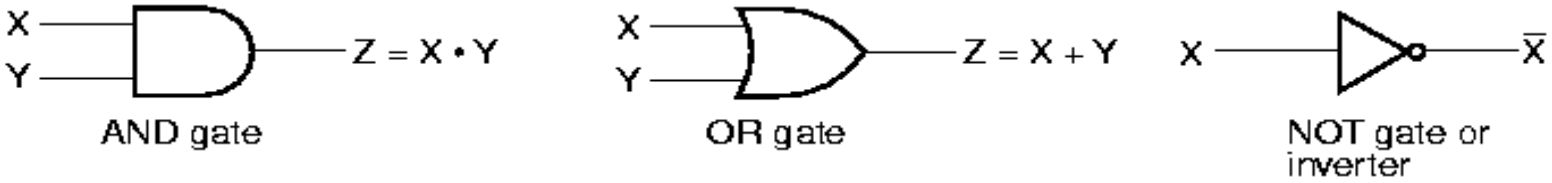

(a) Graphic symbols

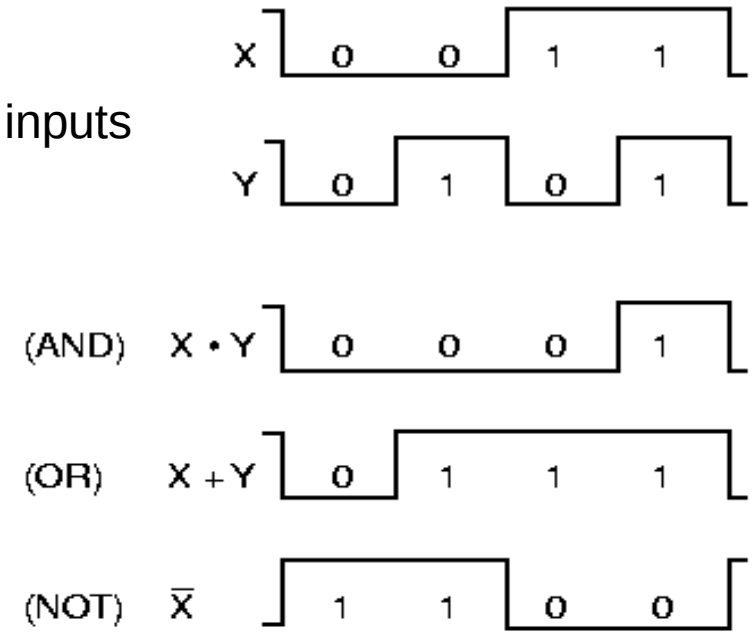

(b) Timing diagram

Terms Definition

- **Literal**
  - Variable or its complement: A, A’,
- **Expression**
  - Literals combined by AND, OR, complement, parentheses
  - X+Y, PQR
  - A + BC
  - A(B+C)+B’
- **Truth table**
  - Specifying the values of Boolean expression for **every possible combination of the values of variables** in the expression
- **Equation**
  - Two expressions are **equivalent for every value of variables**
  - AB’+C = A(B’+C)+C

Evaluation of Expressions

- Insert the value of every literal

Literal : a variable or its complement in a logic expression

$$ab'c + a'b + a'bc' + b'c'$$

10 literals

Logic Evaluation (example) : A=B=C=1, D=E=0

$$[A(C + D)]' + BE$$
$$= [1(1 + 0)] + 1\ \ 0 = [1(1)]' + 0 = 0 + 0 = 0$$

Truth Table of Circuits

- Find the output value for every combination of variables.

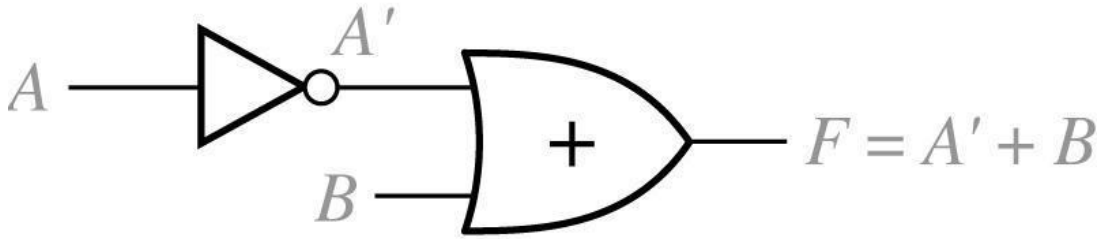

A B	A’	F = A’ + B
0 0	1	1
0 1	1	1
1 0	0	0
1 1	0	1

Equation Proof using Truth Table

$$AB'+C = (A+C)(B'+C)$$

$$\underbrace{2 \times 2 \times 2 \times \ldots}_{\text{n times}} = 2^n$$

n variables need 2^n rows

A B C	B'	AB'	AB' + C	A + C	B' + C	(A + C) (B' + C)
0 0 0	1	0	0	0	1	0
0 0 1	1	0	1	1	1	1
0 1 0	0	0	0	0	0	0
0 1 1	0	0	1	1	1	1
1 0 0	1	1	1	1	1	1
1 0 1	1	1	1	1	1	1
1 1 0	0	0	0	1	0	0
1 1 1	0	0	1	1	1	1

Expression and Gates Circuit

- Example

Logic Expression : $[A(C+D)]'+BE$

Circuit of logic gates

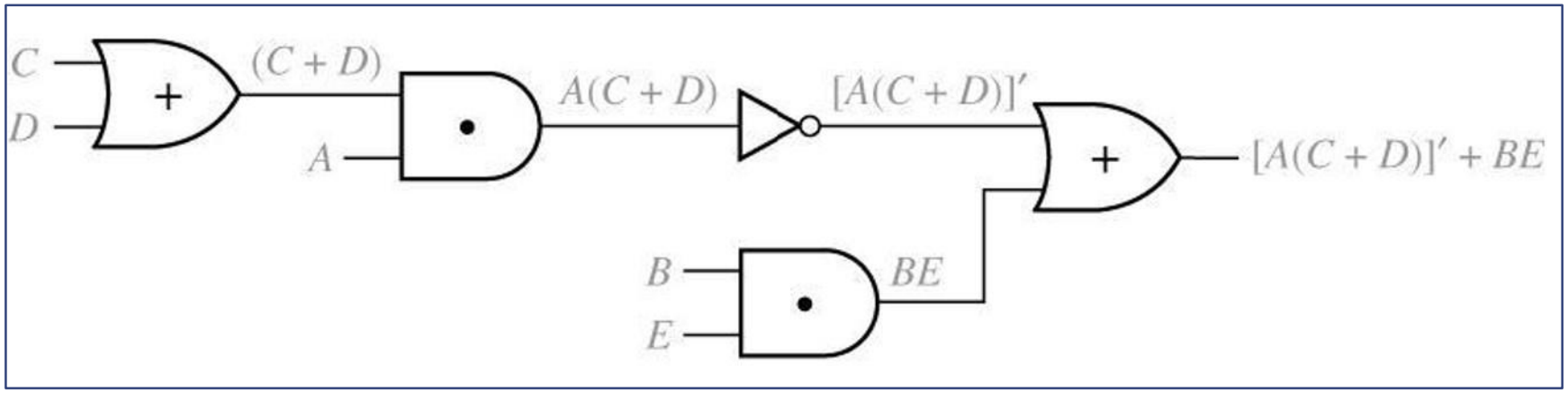

Basic Theorems

1)	$X + 0 = X$	$X \quad 1 = X$
	$X + 1 = 1$	$X \quad 0 = 0$
2)	$X + X = X$	$X \quad X = X$
3)	$(X')' = X$	
4)	$X + X' = 1$	$X \quad X' = 0$

Example

$$(AB' + D)E + 1 = 1$$

$$(AB' + D)(AB' + D)' = 0$$

Proof by Switching Circuit (I)

$A \cdot A$

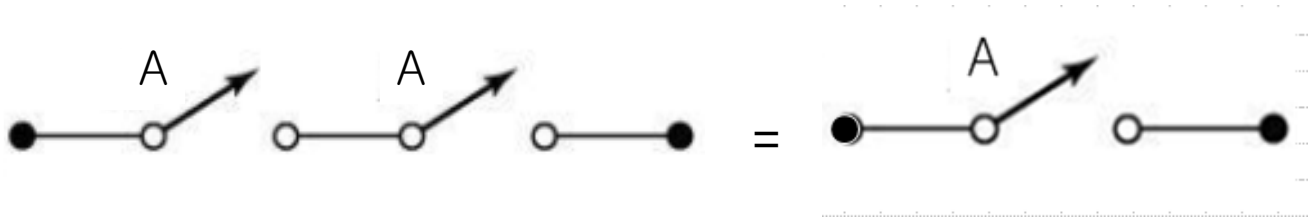

$A + A$

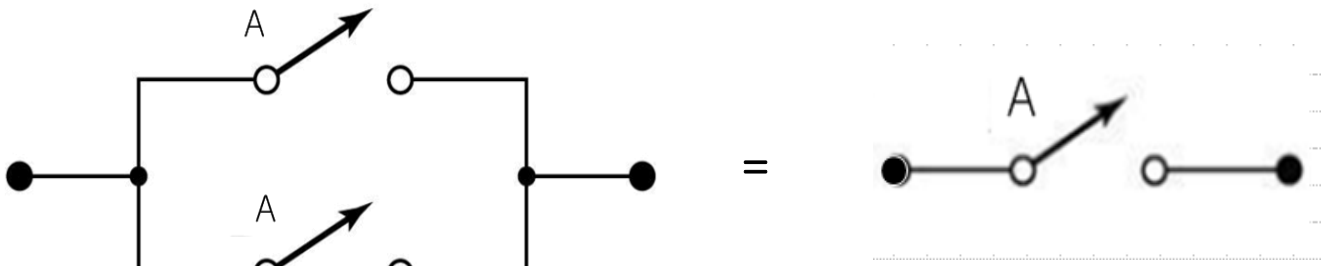

$A + 0$

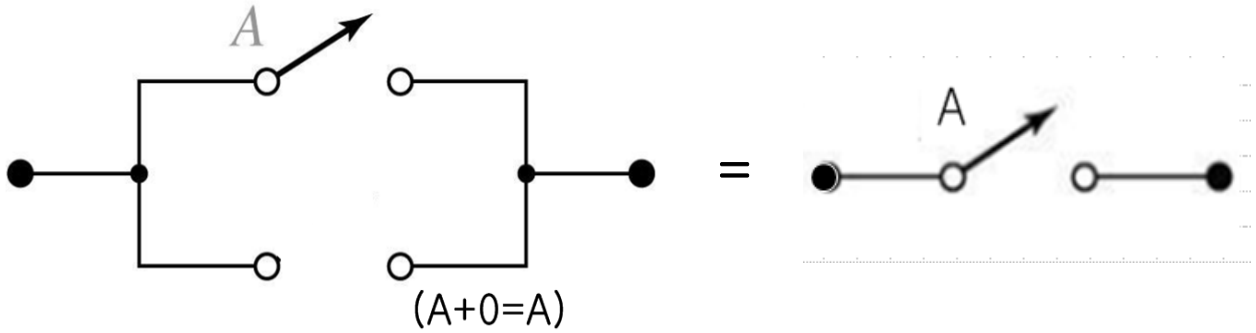

Proof by Switching Circuit (II)

A + 1

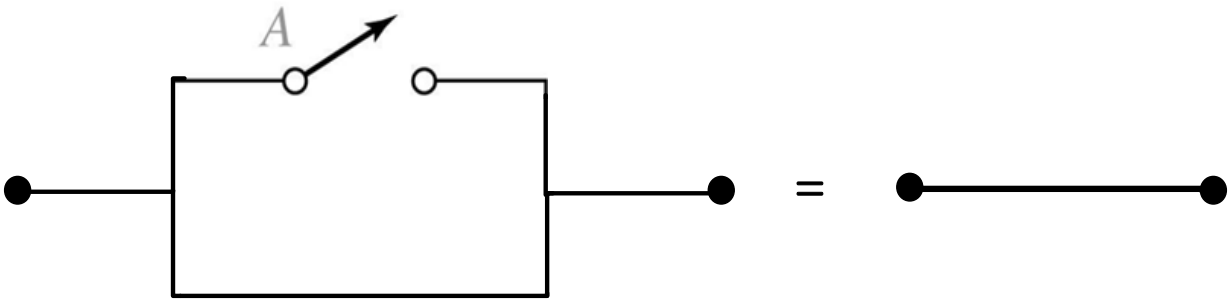

(A+1=1)

A + A’

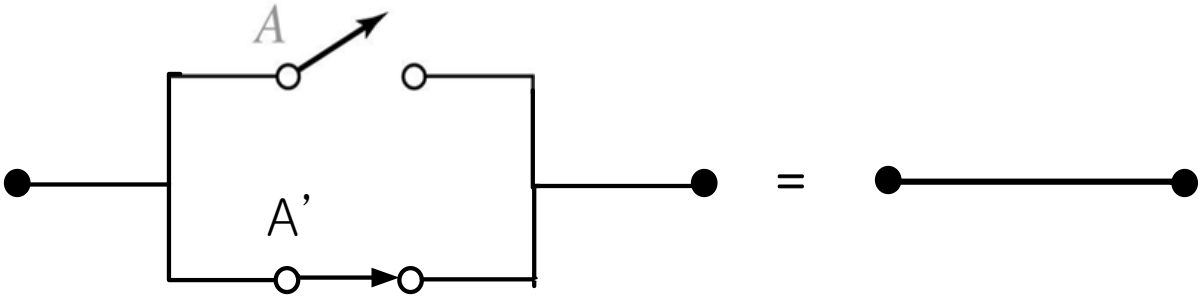

(A+A’=1)

A · A’

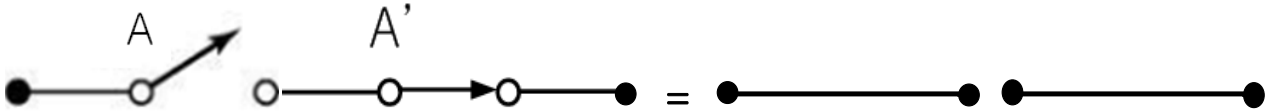

(A A’=0)