Digital Logic

Solution of Mid test (4/28)

이 상 화

1

1 (1) 36 − 69

1's complement	2's complement
00100100 (36)	00100100 (36)
+ 10111010 (−69)	+ 10111011 (−69)
11011110 (−33)	11011111 (−33)

(2) −33 − 71

11011110 (−33)	11011111 (−33)
+ 10111000 (−71)	+ 10111001 (−71)
1 10010110	1 10011000 (−104)
+ 1	버림
10010111 (−104)	

2

(1) $AB' + BC + AC'D' + ADF + AEF$

$= BC + A(B' + C'D' + DF + EF)$

$= (BC+A)(BC + B' + C'D' + DF + EF)$

$B'+C.$

$= (A+B)(A+C)(B' + C + C'D' + DF + EF)$

$C+D'.$

$= (A+B)(A+C)(B' + C + D' + DF + EF)$

$D'+F$

$= (A+B)(A+C)(B' + C + D' + F + EF)$

$F(1+E) = F.$

$= (A+B)(A+C)(B' + C + D' + F)$ //

(2) Multiplying out.

$(A+BC)(B' + C + D' + F)$

$= AB' + AC + AD' + AF + BC + BCD' + BCF$

BC

$= AB' + AC + AD' + AF + BC$

consensus

$= AB' + AD' + AF + BC$ //

3. (1)

a(1/0)

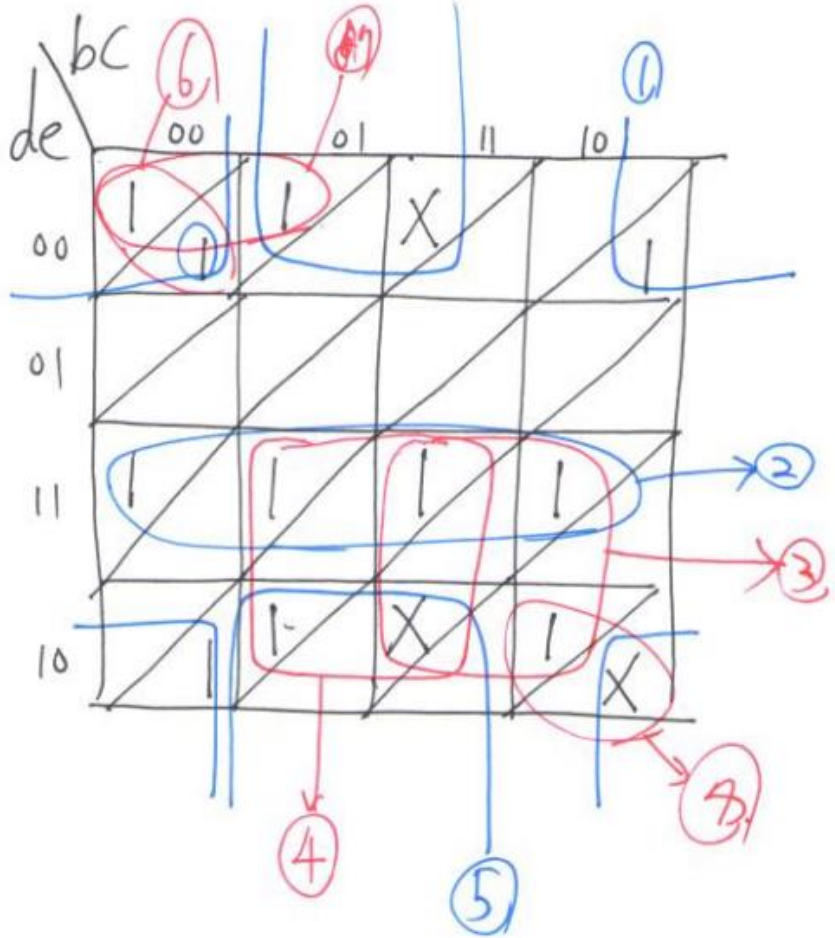

총 8개 : Prime Implicant.

① $a'c'e'$ → Essential PI.

② ade → E.P.I

③ abd

④ acd

⑤ ace'

⑥ $b'c'd'e'$

⑦ $ab'd'e'$

⑧ $bc'de'$

3. (2)

Minimum Sum-of-Product. (204)

① + ② + ③ + ⑤ + { ⑥ ⑦.

$a'c'e' + ade + abd + ace' + \begin{cases} b'c'd'e \\ ab'd'e' \end{cases}$

3 (3).

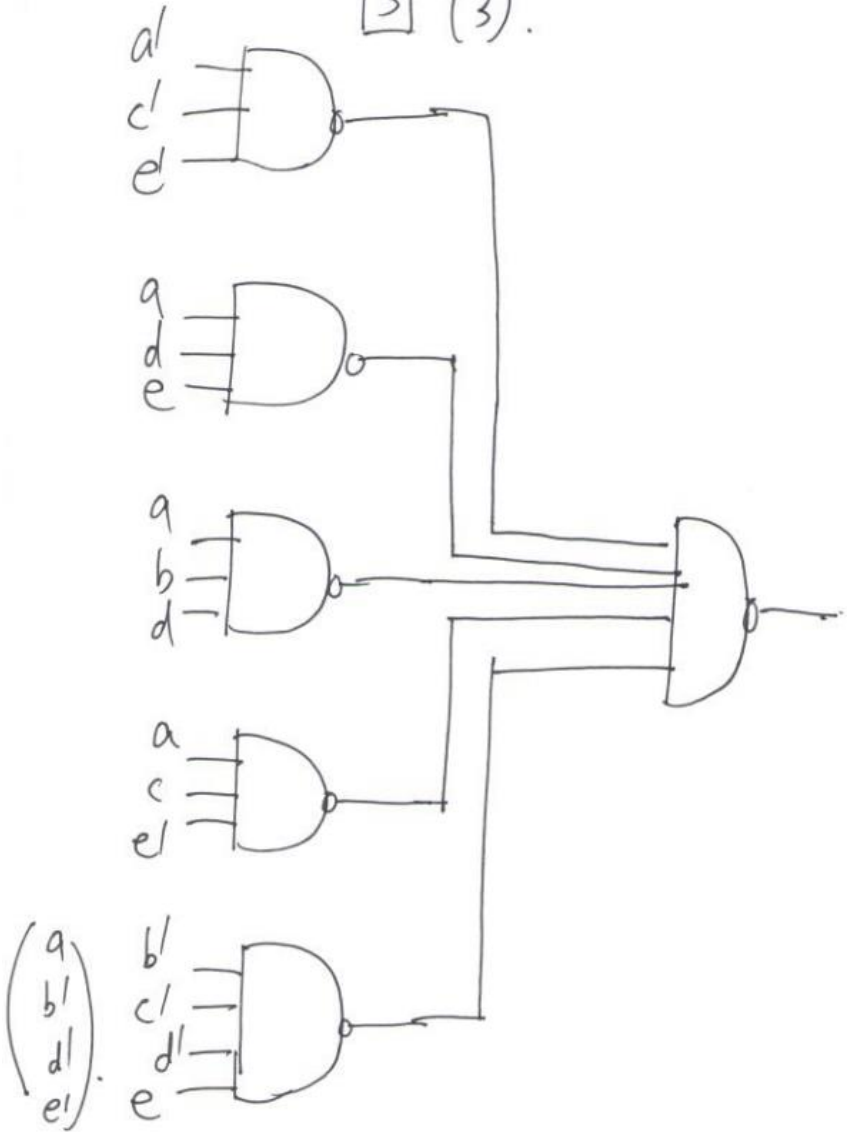

4

			B_3	B_2	B_1	B_0
				A_2	A_1	A_0
			A_0B_3	A_0B_2	A_0B_1	A_0B_0
		A_1B_3	A_1B_2	A_1B_1	A_1B_0	
	A_2B_3	A_2B_2	A_2B_1	A_2B_0		
C_6	C_5	C_4	C_3	C_2	C_1	C_0

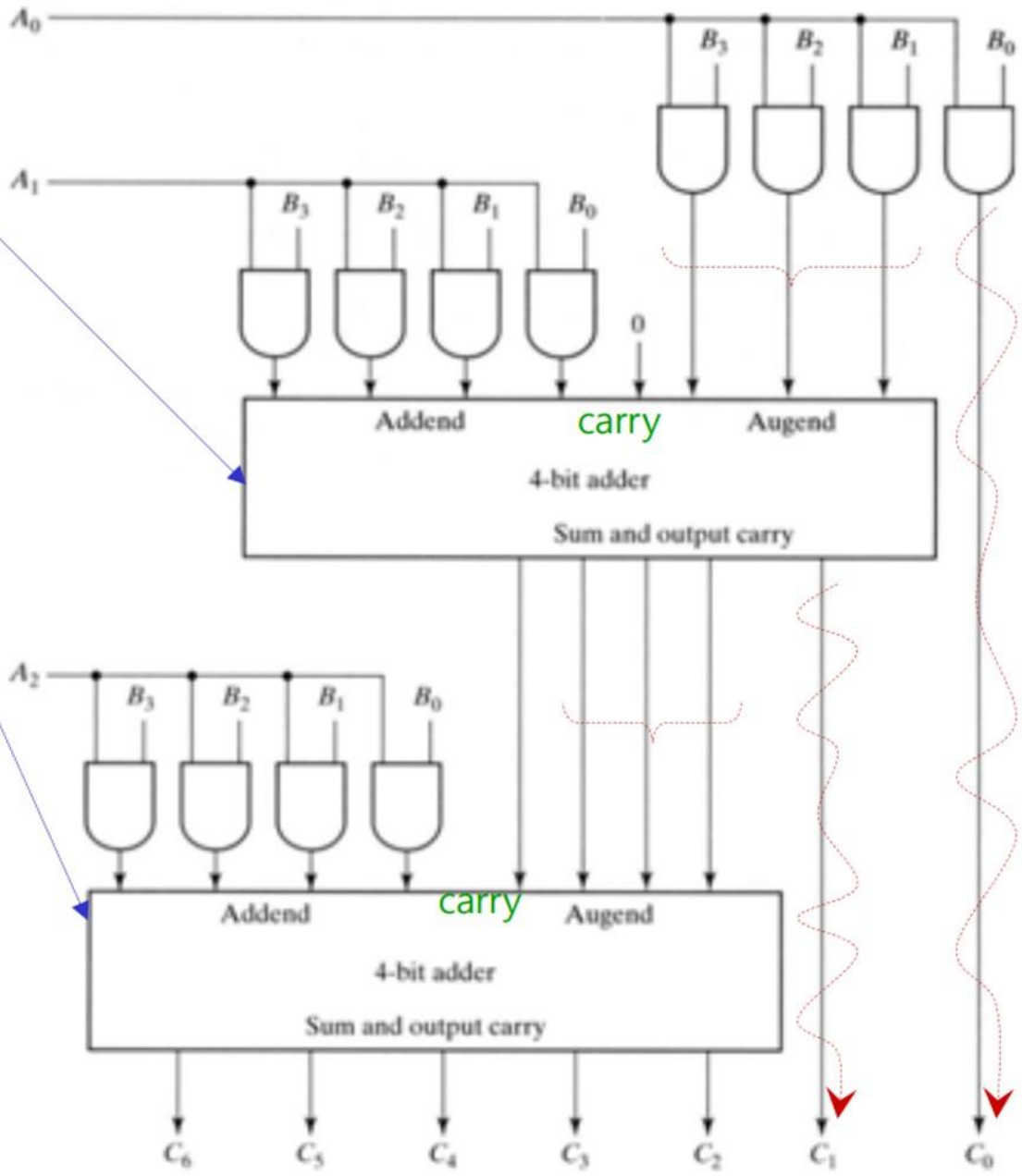

5

$$A'B' + A'D + BCD + B'CD'$$

CD \ AB	00	01	11	10
00	1			
01	1	1		
11	1	1	1	
10	1			1

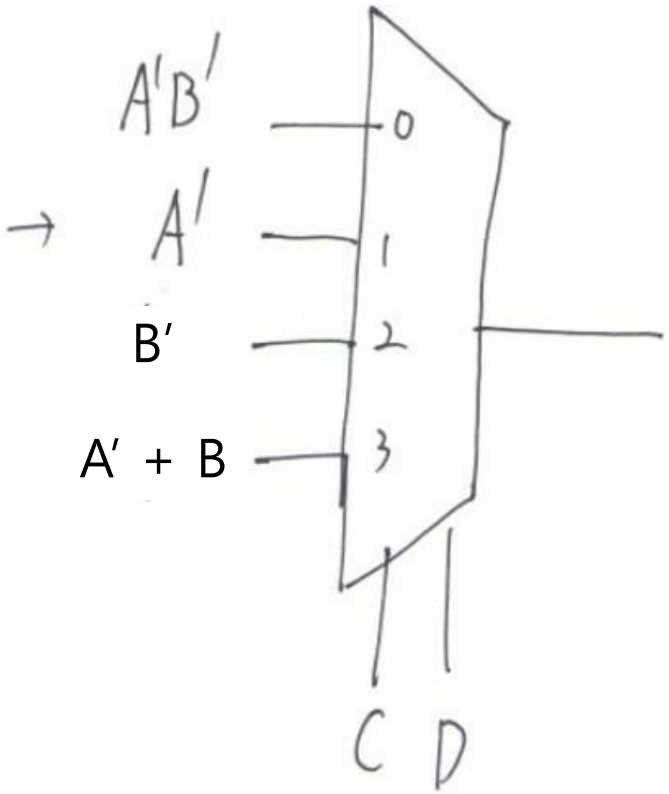

6

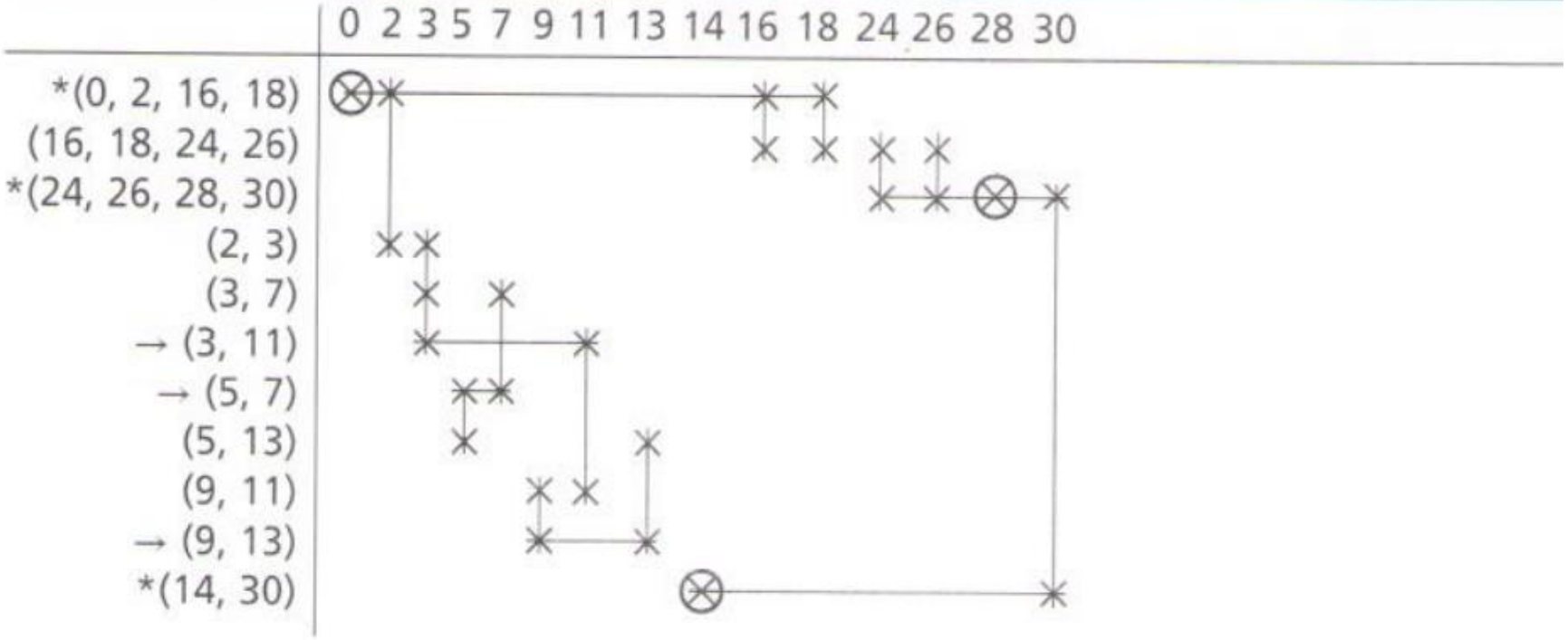

*Indicates an essential prime implicant.

From this chart, write down the chosen prime implicants in 0, 1, and – notation.

Then, write the minimum sum of products in algebraic form.

–00–0, 11--0, 0–011, 001–1, 01–01, and –1110

$f = B'C'E' + ABE' + A'C'DE + A'B'CE + A'BD'E + BCDE'$

6

	0	2	3	5	7	9	11	13	14	16	18	24	26	28	30
*(0, 2, 16, 18)	⊗	×								×	×				
(16, 18, 24, 26)										×	×	×	×		
*(24, 26, 28, 30)												×	×	⊗	×
(2, 3)		×	×												
(3, 7)			×		×										
(3, 11)			×				×								
(5, 7)				×	×										
(5, 13)				×				×							
(9, 11)						×	×								
(9, 13)						×		×							
*(14, 30)									⊗						×

*Indicates an essential prime implicant.

Start by choosing prime implicant (5, 13).

$$f = BCDE' + B'C'E' + ABE' + A'B'DE + A'CD'E + A'BC'E$$

7

$A = B$

$F_1 \Rightarrow \quad (A_3'B_3' + A_3B_3)\,(A_2'B_2' + A_2B_2)\,(A_1'B_1' + A_1B_1).$

$A > B$ $\qquad A_3 = B_3.$

$F_2 \Rightarrow \quad A_3B_3' + (A_3'B_3' + A_3B_3)\cdot(A_2 \cdot B_2').$

$+ \; (A_3'B_3' + A_3B_3)\,(A_2'B_2 + A_2B_2)\cdot(A_1B_1')$

$(A_3 = B_3) \;\&\; (A_2 = B_2) \;\&\; (A_1 > B_1)$ //