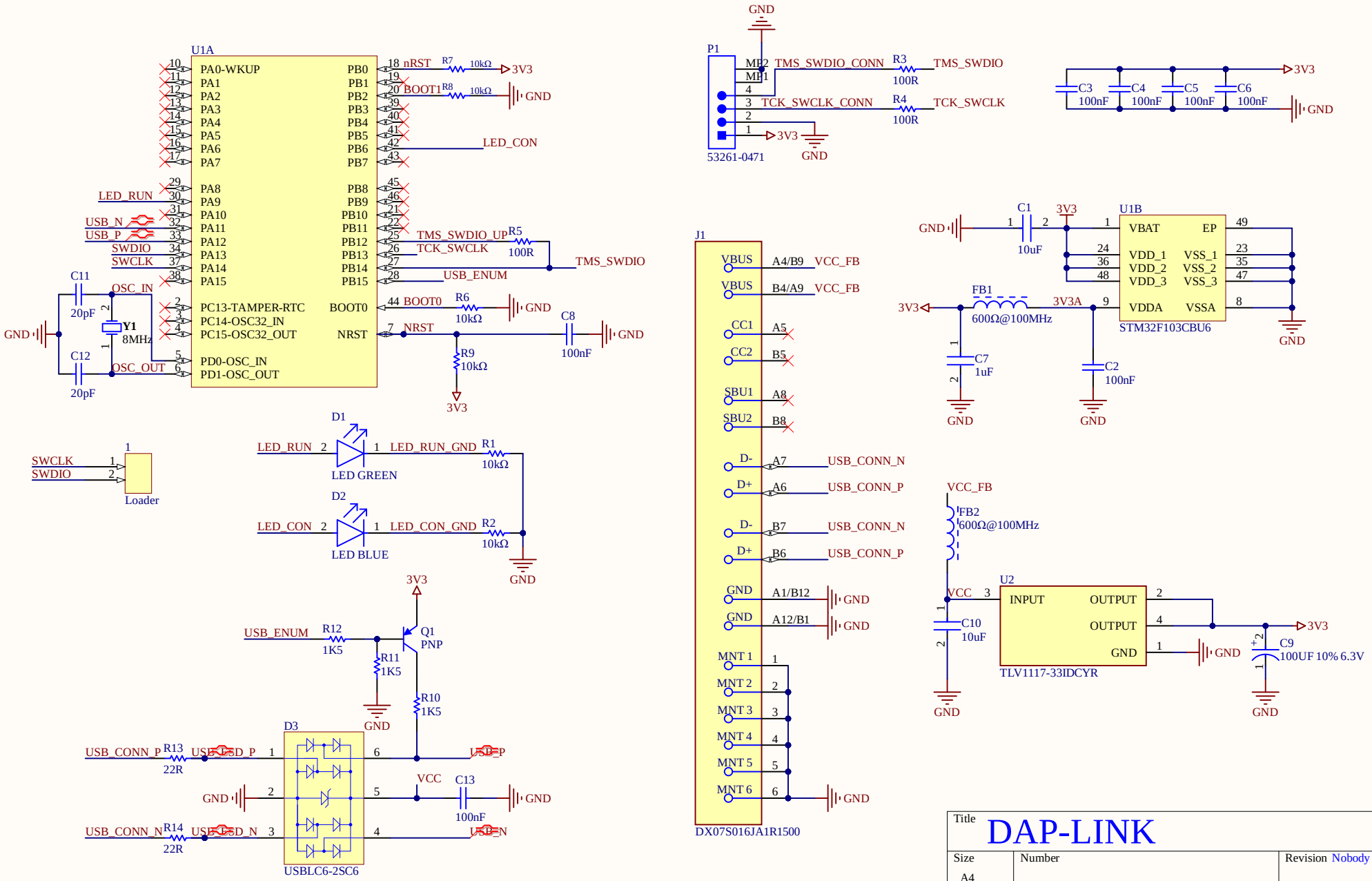

Title	DAP-LINK	
Size A4	Number	Revision Nobody
Date: 10/31/2022		Sheet of
File: D:\Robomaster\..\Sheet1.SchDoc		Drawn By: WangHaozhe