SAC1200E.7.3

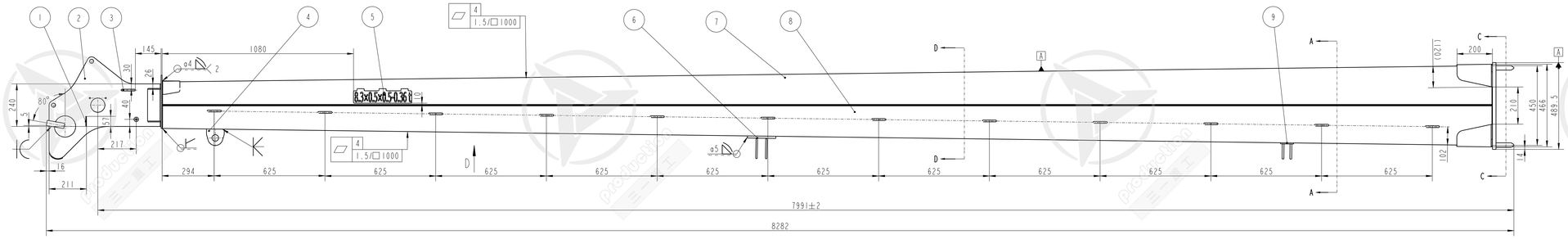

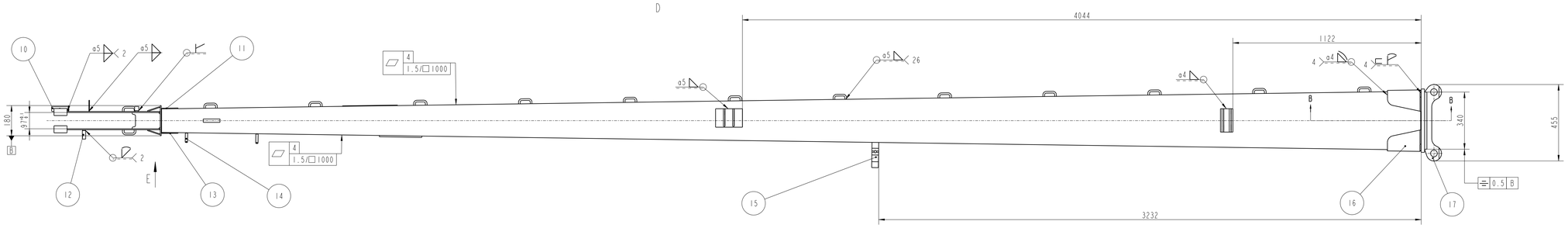

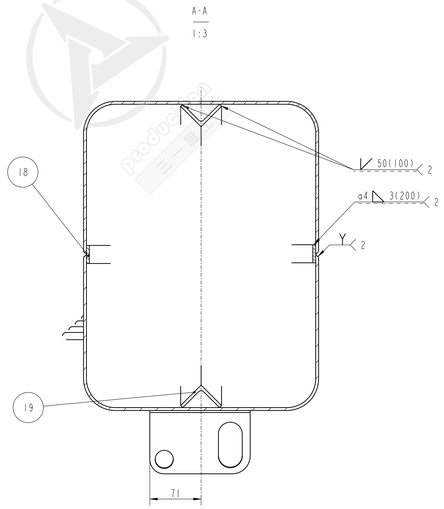

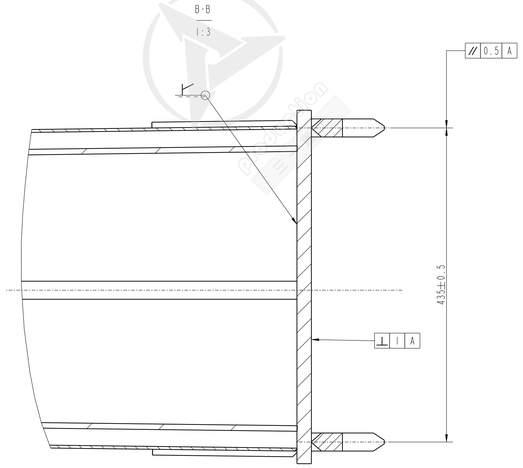

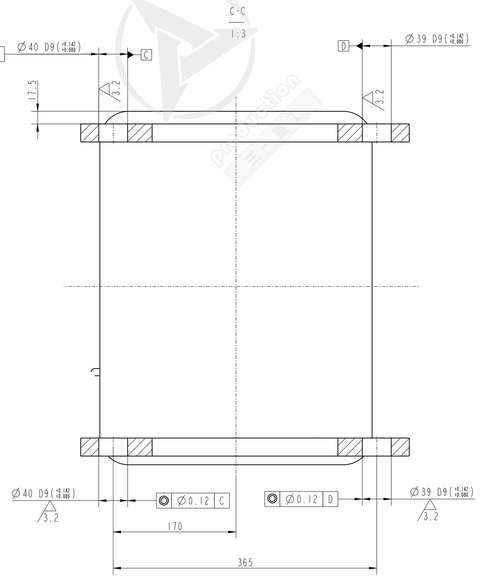

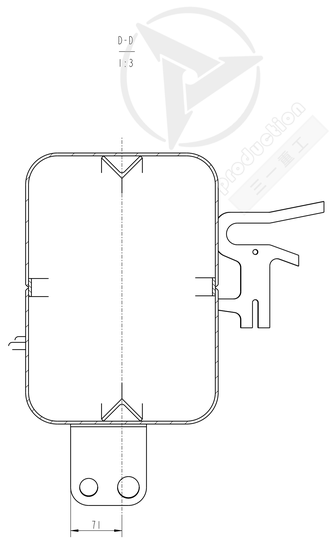

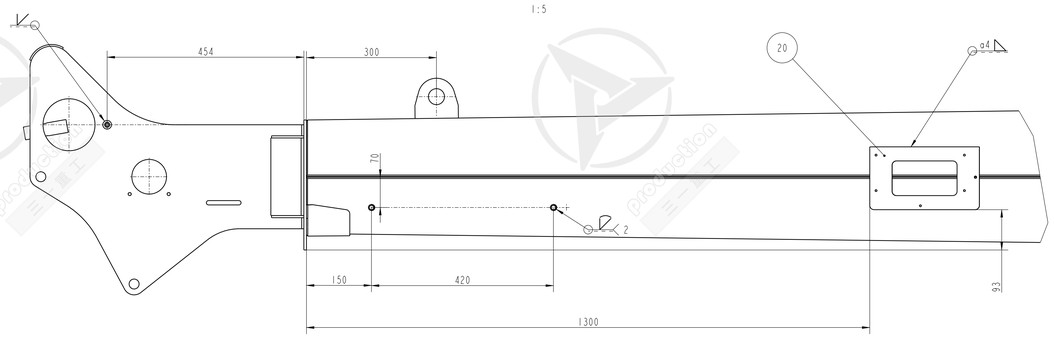

产品图样按Q/SY 012 005执行

NO.	PART NO.	DESCRIPTION	QTY	MATERIAL	WEIGHT	REMARK
20	14322843	PlateSAC1300E.1.3.1-1	1	钢板-8/Q345B	1.547	
19	QZJ006898768	Angle steel SAC1200E.7.3-8	2	钢板-4.0/Q235B	18.214	
18	QZJ006213712	Flitch PlateSAC1200E.7.3-3	2	钢板-4.0/Q235B	5.894	
17	QZJ006213714	Double-hole plate SAC1200E.7.3.2	1		37.303	
16	QZJ006213710	reinforced plateSAC1200E.7.3-4	4	钢板-8/HG785	2.254	
15	10907937	buoyancyQAT229.1.12.4.1.5-1	1	钢板-40/HG785	2.543	
14	10230313	lock pin QPZK.21.2-13.	2	直销Z-16/45	0.067	
13	QZJ006213705	reinforced plateSAC1200E.7.3-6	1	钢板-4.0/HG70	0.327	
12	10013822	Locating shaftQPZ6A.1.4.1-1	1	直销Z-25/35	0.118	
11	QZJ006213713	reinforced plateSAC1200E.7.3-5	1	钢板-4.0/HG70	0.332	
10	14378672	Fixed tubeSAC1300E.1.8.8-12	1	钢管Φ30×3/20	0.196	
9	QZJ006213715	Fixed base of Folding armSAC1200E.7.3.3	1		1.938	
8	QZJ006213709	Lower beat plateSAC1200E.7.3-2	1	钢板-4.0/HG70	130.789	
7	QZJ006213704	Upper beat plate SAC1200E.7.3-1	1	钢板-4.0/HG70	129.714	
6	11888799	Double-hole seat SAC1000C.1.8A.9.1	1		2.961	
5	QZJ006213937	DoubleplateSAC1200E.7.3-7	1	钢板-3.0/Q235B	0.464	
4	QZJ006898396	ear plate SAC1200E.7.3-10	1	钢板-20/Q345B	1.152	
3	11021661	coiling ringQPZ50.1A.8A.1A-1	14	直销Z-10/35	0.066	
2	QZJ006213716	SupportSAC1200E.7.3.1	1		22.220	
1	10144308	ear plateQPZ2.2T.1B-5	1	钢板-4.0/HG70	0.072	

技术要求

1.所有焊缝按Q/SY 073 002.1-2012 中A类Ⅱ级要求。
2.筒体两侧在长度方向上的直线度不大于4/1.5:1000,避免上供,全长下拱和旁弯不大于4。
3.表面喷涂是哪一底漆和面漆,喷涂面积20.04m²。

MARK	NO.	SEGMENT	MOD DOC NO	SIGNATURE	DATE
	replace	B3-H3	N742924		
DES.	郝海刚	2021-10-13	PRO.	倪华祥	2021-10-13
CHD.	李真	2021-10-13	STD.	徐敏忠	2021-10-14
AUD.	倪华祥	2021-10-14	APPD.		

三一重工股份有限公司

Folding boom

QZJ006214011

SAC1200E.7.3

VERSION	MASS	SCALE
B	389.964	1:10

SHEET: 1 OF 1