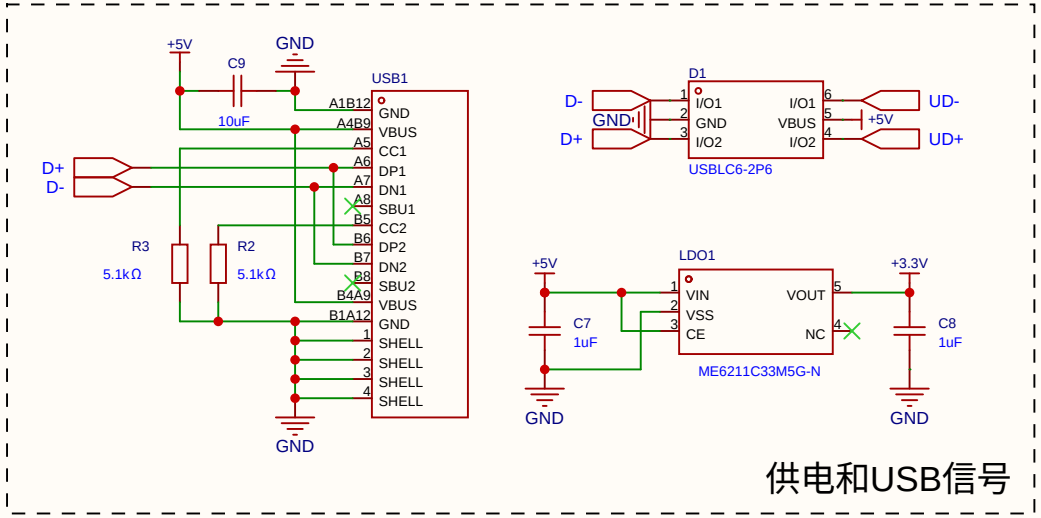

供电和USB信号

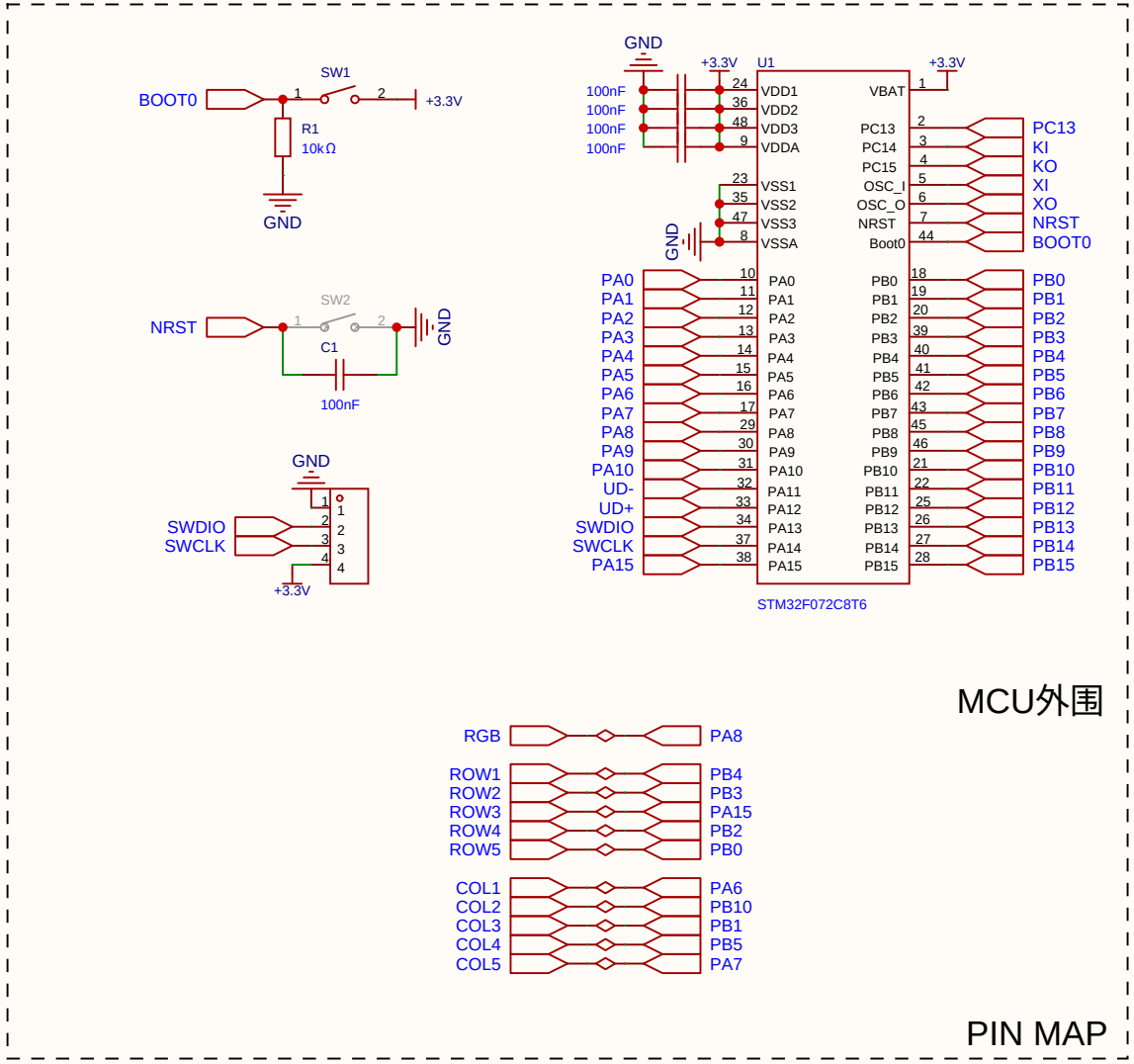

MCU外围

PIN MAP

原理图	Schematic1_1	更新日期	2026-03-14
		创建日期	2025-11-11
图页	MCU及外围	物料编码	
绘制		STM32F072小键盘	
审阅			
		版本	尺寸	页 1 共 2
嘉立创EDA		V1.0	A4	嘉立创EDA

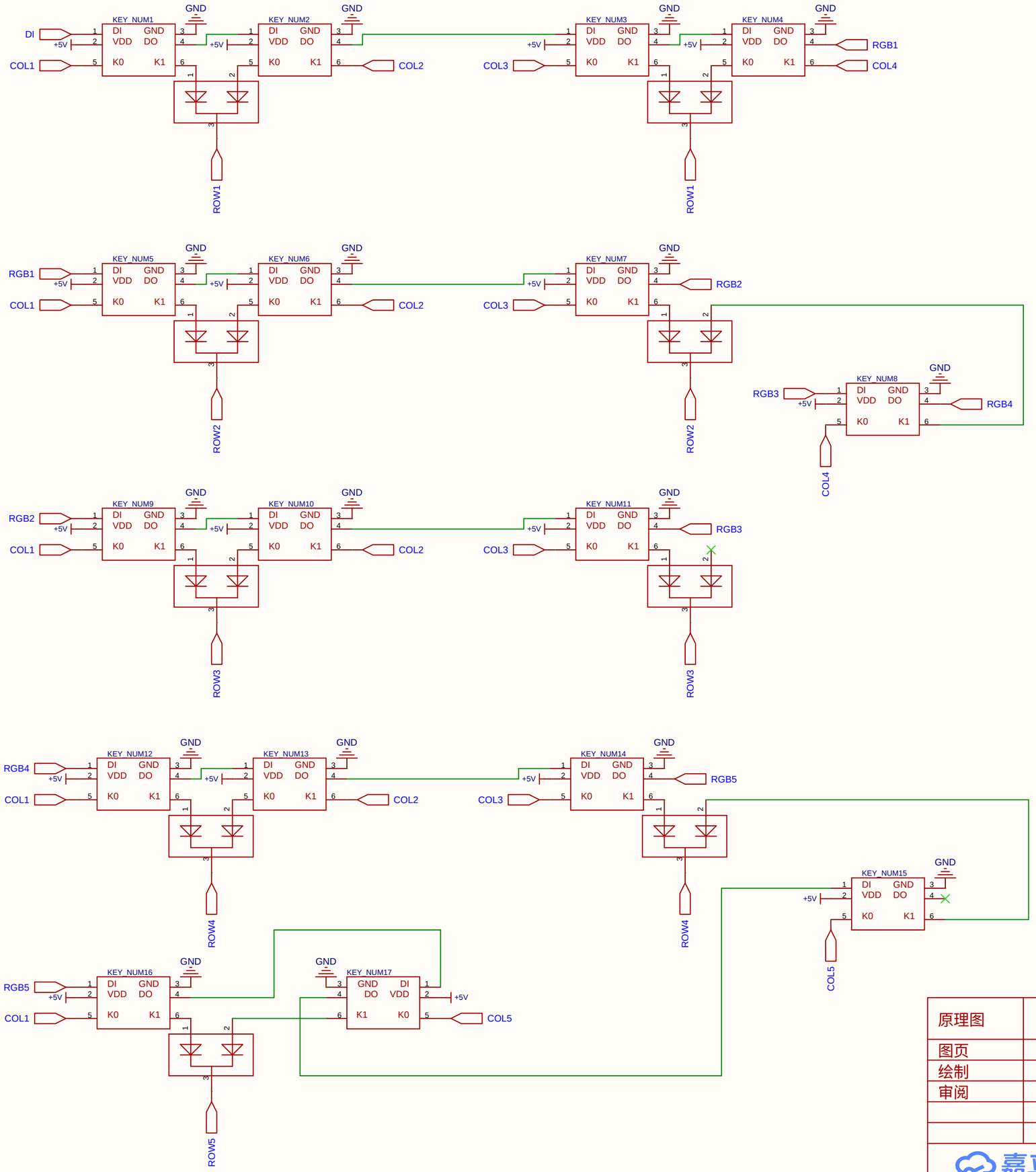

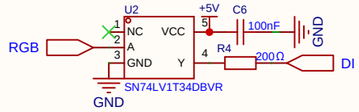


```
"layouts": {
    "LAYOUT": {
        "layout": [
            {"label":"Num Lock","matrix": [0, 0], "x": 0, "y": 0,"w":1,"h":1},
            {"label":"/","matrix": [0, 1], "x": 1, "y": 0,"w":1,"h":1},
            {"label":"*","matrix": [0, 2], "x": 2, "y": 0,"w":1,"h":1},
            {"label":"-","matrix": [0, 3], "x": 3, "y": 0,"w":1,"h":1},

            {"label":"7","matrix": [1, 0], "x": 0, "y": 1,"w":1,"h":1},
            {"label":"8","matrix": [1, 1], "x": 1, "y": 1,"w":1,"h":1},
            {"label":"9","matrix": [1, 2], "x": 2, "y": 1,"w":1,"h":1},
            {"label":"+","matrix": [1, 3], "x": 3, "y": 1.5,"w":1,"h":2},

            {"label":"4","matrix": [2, 0], "x": 0, "y": 2,"w":1,"h":1},
            {"label":"5","matrix": [2, 1], "x": 1, "y": 2,"w":1,"h":1},
            {"label":"6","matrix": [2, 2], "x": 2, "y": 2,"w":1,"h":1},

            {"label":"1","matrix": [3, 0], "x": 0, "y": 3,"w":1,"h":1},
            {"label":"2","matrix": [3, 1], "x": 1, "y": 3,"w":1,"h":1},
            {"label":"3","matrix": [3, 2], "x": 2, "y": 3,"w":1,"h":1},
            {"label":"Enter","matrix": [3, 4], "x": 3, "y": 3.5,"w":1,"h":2},

            {"label":"0","matrix": [4, 0], "x": 2, "y": 0,"w":2,"h":1},
            {"label":".","matrix": [4, 4], "x": 2, "y": 0,"w":1,"h":1}
        ]
    }
}
```

（ROW，COL）

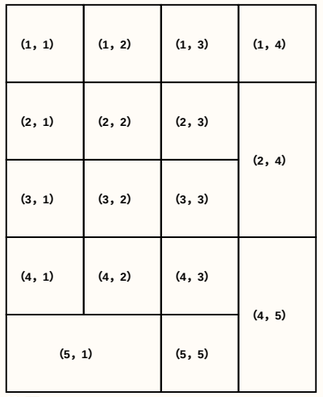

注意：
qmk的json文件矩阵写法是从0，0开始；
原理图为了方便阅读从1，1开始

原理图	Schematic1_1	更新日期	2026-03-14
		创建日期	2025-11-07
图页	按键矩阵和RGB信号电平转换	物料编码	
绘制			
审阅			
		STM32F072小键盘	
		版本	尺寸
		页 2 共 2	
嘉立创EDA		V1.0	A4
		嘉立创EDA	