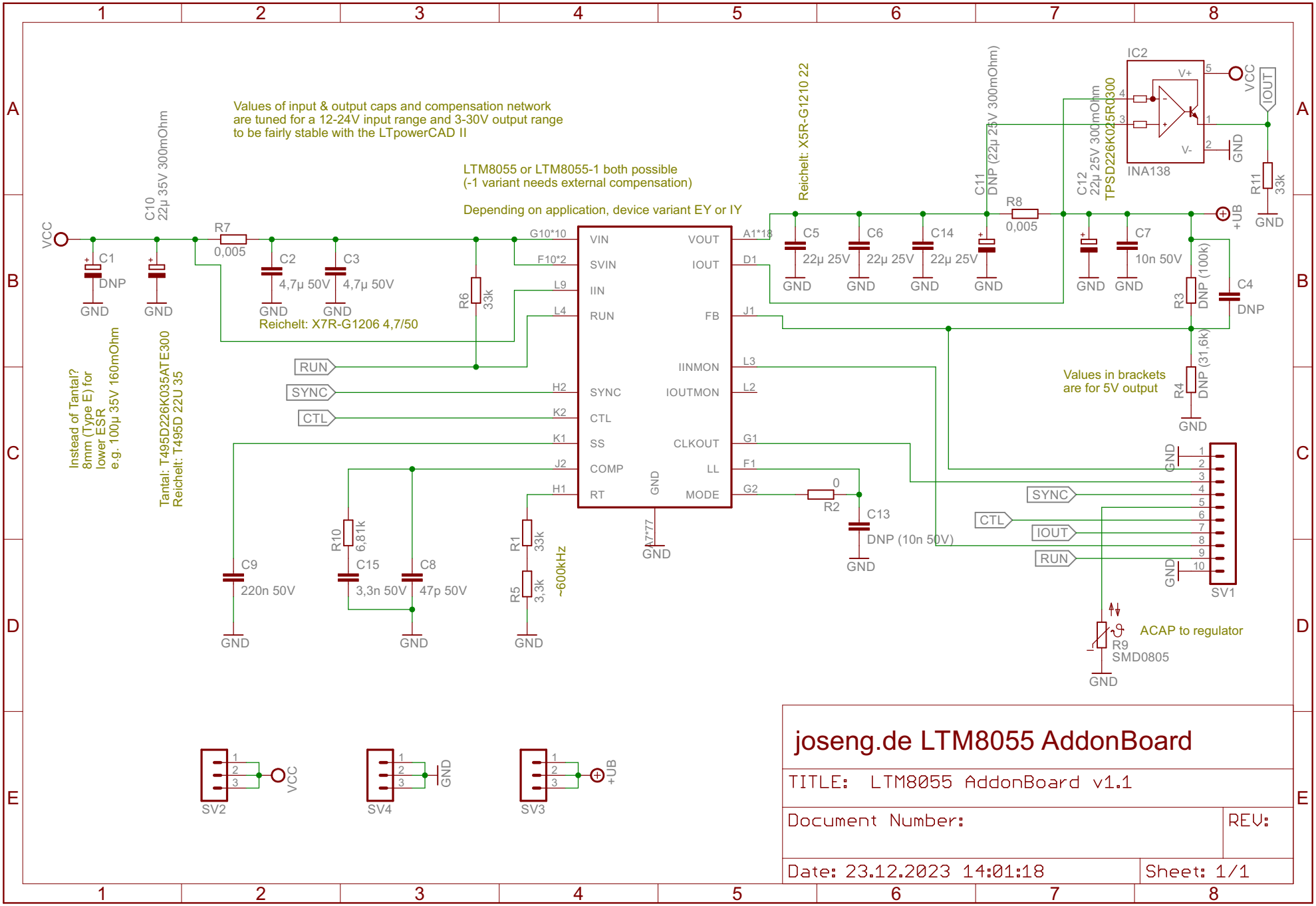
Values of input & output caps and compensation network
are tuned for a 12-24V input range and 3-30V output range
to be fairly stable with the LTpowerCAD II
LTM8055 or LTM8055-1 both possible
(-1 variant needs external compensation)
Depending on application, device variant EY or IY
Reichelt: X5R-G1210 22
C11
DNP (22µ 25V 300mOhm)
C12
22µ 25V 300mOhm
TPSD226K025R0300
IC2
INA138
V+
V-
VCC
IOUT
GND
R11
33k
+UB
C10
22µ 35V 300mOhm
VCC
C1
DNP
GND
R7
0,005
C2
4,7µ 50V
C3
4,7µ 50V
Reichelt: X7R-G1206 4,7/50
R6
33k
G10*10
F10*2
L9
L4
VIN
SVIN
IIN
RUN
SYNC
CTL
SS
COMP
RT
VOUT
IOUT
FB
IINMON
IOUTMON
CLKOUT
LL
MODE
A1*18
D1
J1
L3
L2
G1
F1
G2
A7*77
RUN
SYNC
CTL
H2
K2
K1
J2
H1
C5
22µ 25V
C6
22µ 25V
C14
22µ 25V
R8
0,005
C7
10n 50V
R3
DNP (100k)
C4
DNP
R4
DNP (31,6k)
Values in brackets
are for 5V output
Instead of Tantal?
8mm (Type E) for
lower ESR
e.g. 100µ 35V 160mOhm
Tantal: T495D226K035ATE300
Reichelt: T495D 22U 35
C9
220n 50V
R10
6,81k
C15
3,3n 50V
C8
47p 50V
R1
33k
R5
3,3k
~600kHz
R2
0
C13
DNP (10n 50V)
SV1
ACAP to regulator
R9
SMD0805
SV2
SV4
SV3
joseng.de LTM8055 AddonBoard
TITLE: LTM8055 AddonBoard v1.1
Document Number:
REV:
Date: 23.12.2023 14:01:18
Sheet: 1/1