ware labs

Design Review

Overview

Proprietary and Confidential

Schematic

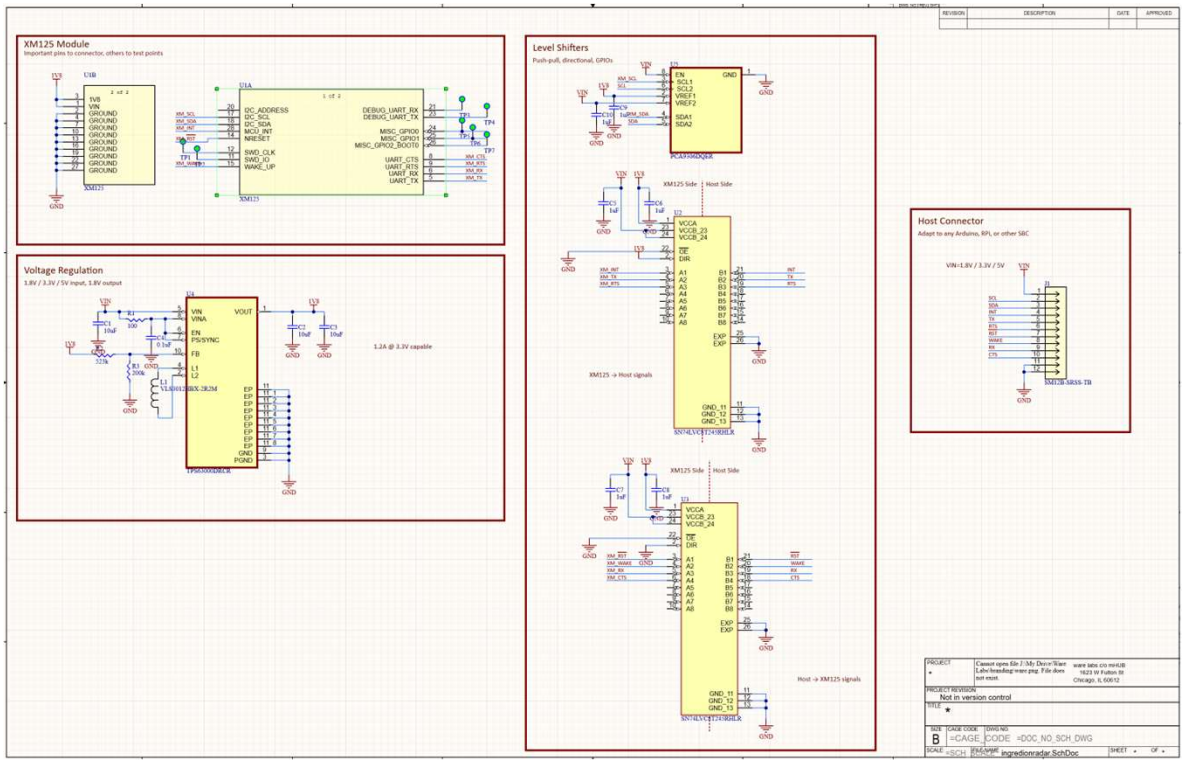
XM125 Module
Important pins to connector, others to test points
Level Shifters
Push-pull, directional, GPIOs
Voltage Regulation
1.8V / 3.3V / 5V input, 1.8V output
1.2A @ 3.3V capable
Host Connector
Adapt to any Arduino, RPi, or other SBC
VIN=1.8V / 3.3V / 5V
XM125 Side
Host Side
XM125 -> Host signals
Host -> XM125 signals
Not in version control

Layout

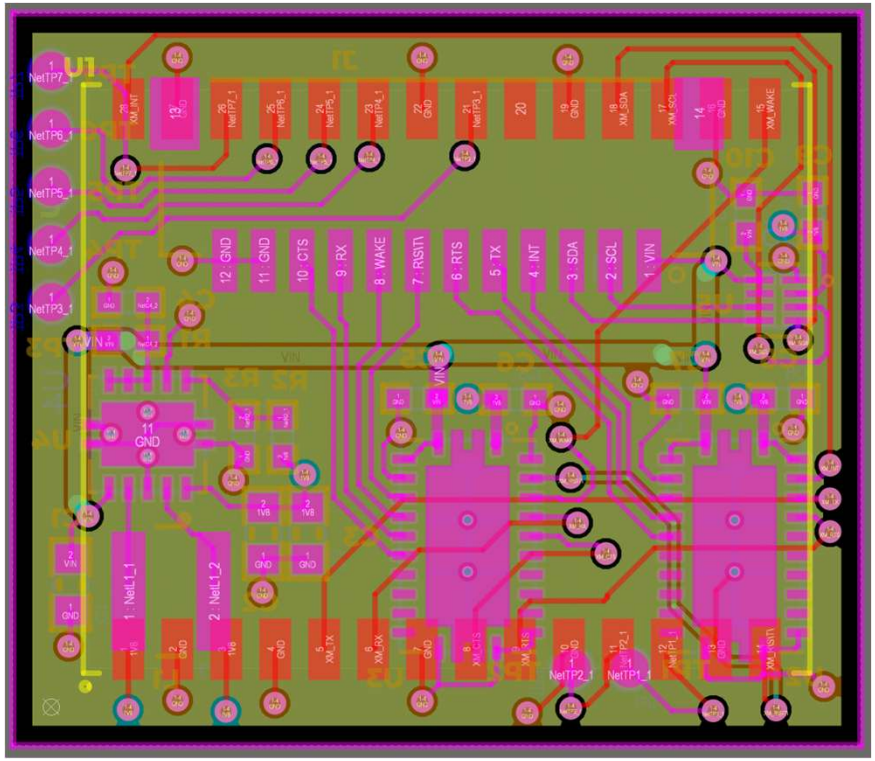

Proprietary and Confidential

Layer 1 (Primary side)

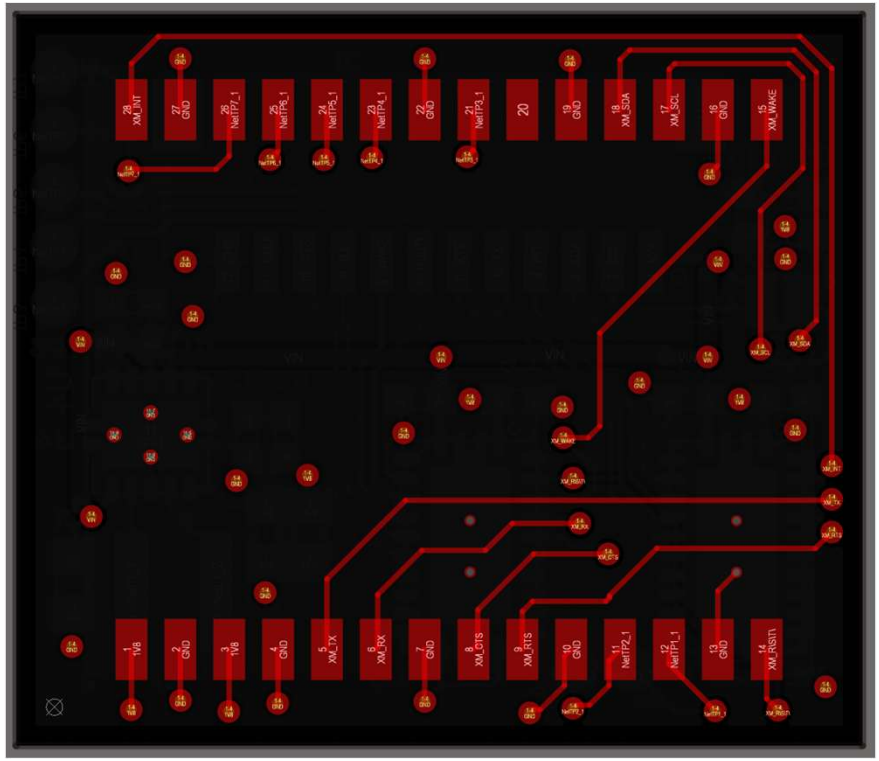

Proprietary and Confidential

Layer 2

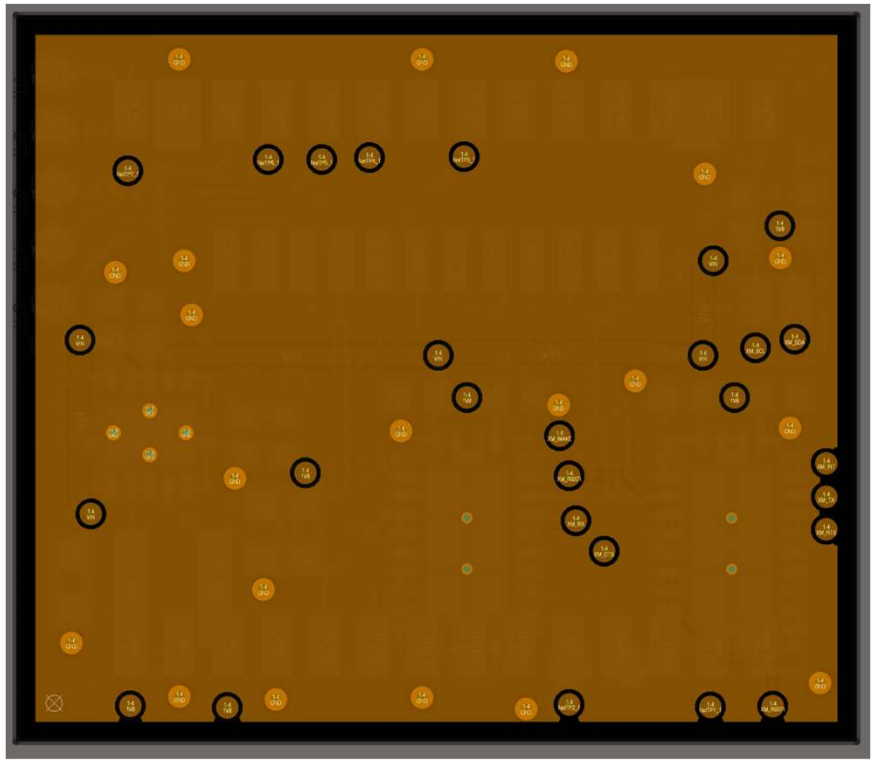

Proprietary and Confidential

Layer 3

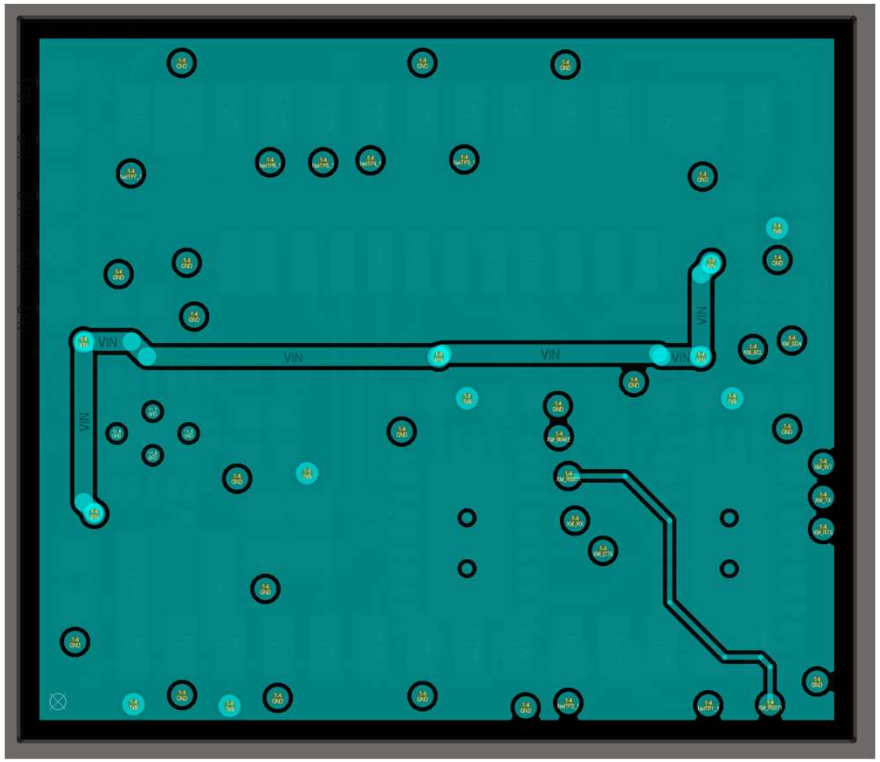

Proprietary and Confidential

Layer 4 (Secondary side)

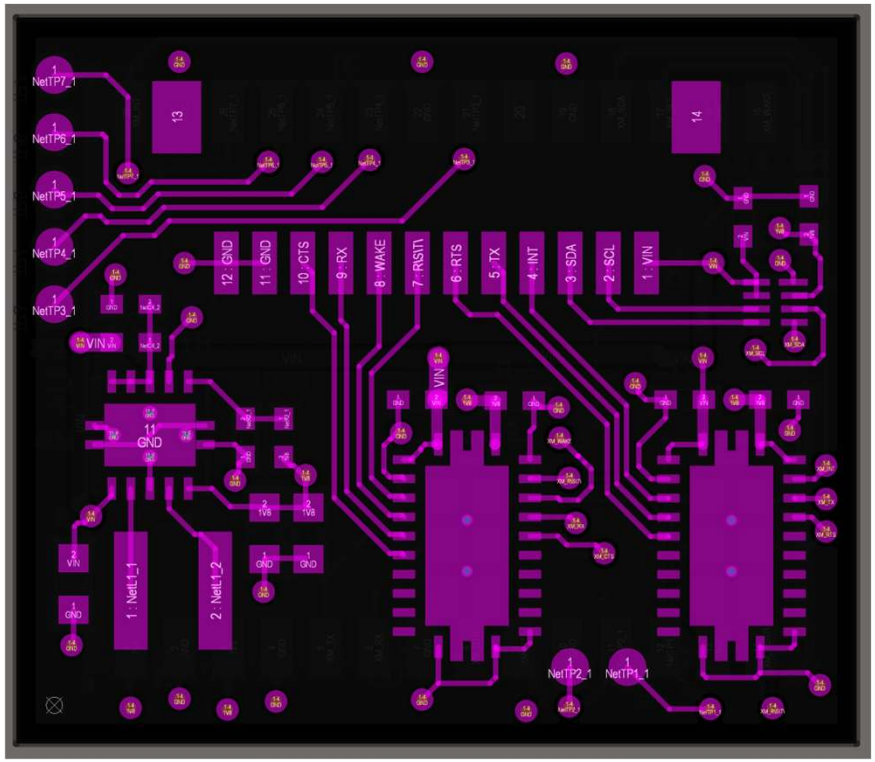

Proprietary and Confidential

Draftsman

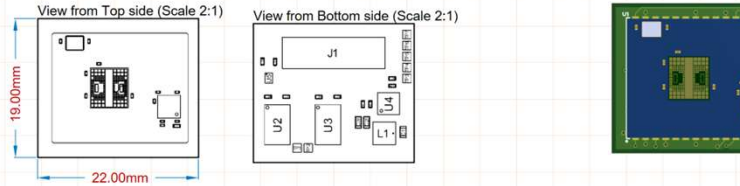

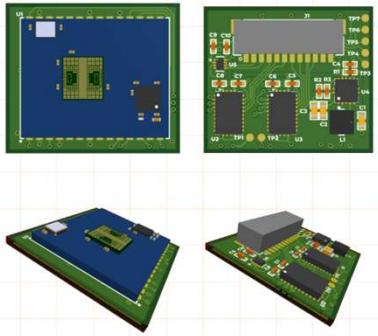

Board Specifications

Board Type	Rigid (19 x 22 mm)
Application	Consumer Electronics
Board Thickness	1.0 mm
Stack Up	Rigid 4 Layer
Line Width / Space	0.152 mm / 0.10 mm
Material Type	FR4
Laser Via	Yes
Drill Hole Size	0.30 mm
Finishing	ENIG
Impedance Matching	No
Soldermask Color	Green
Overlay Color	White
Vias	Standard
Via Stack	See Layer Stack Legend

Layer Stack Legend

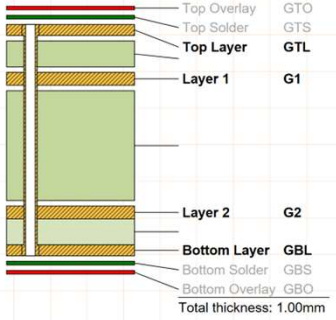

Proprietary and Confidential

Recommendations

Proprietary and Confidential

Grounding

- Recommendations
  - Pour small ground planes on primary / secondary sides for component connections.
  - Alternatively just pour ground on primary / secondary sides to fill all remaining voids.

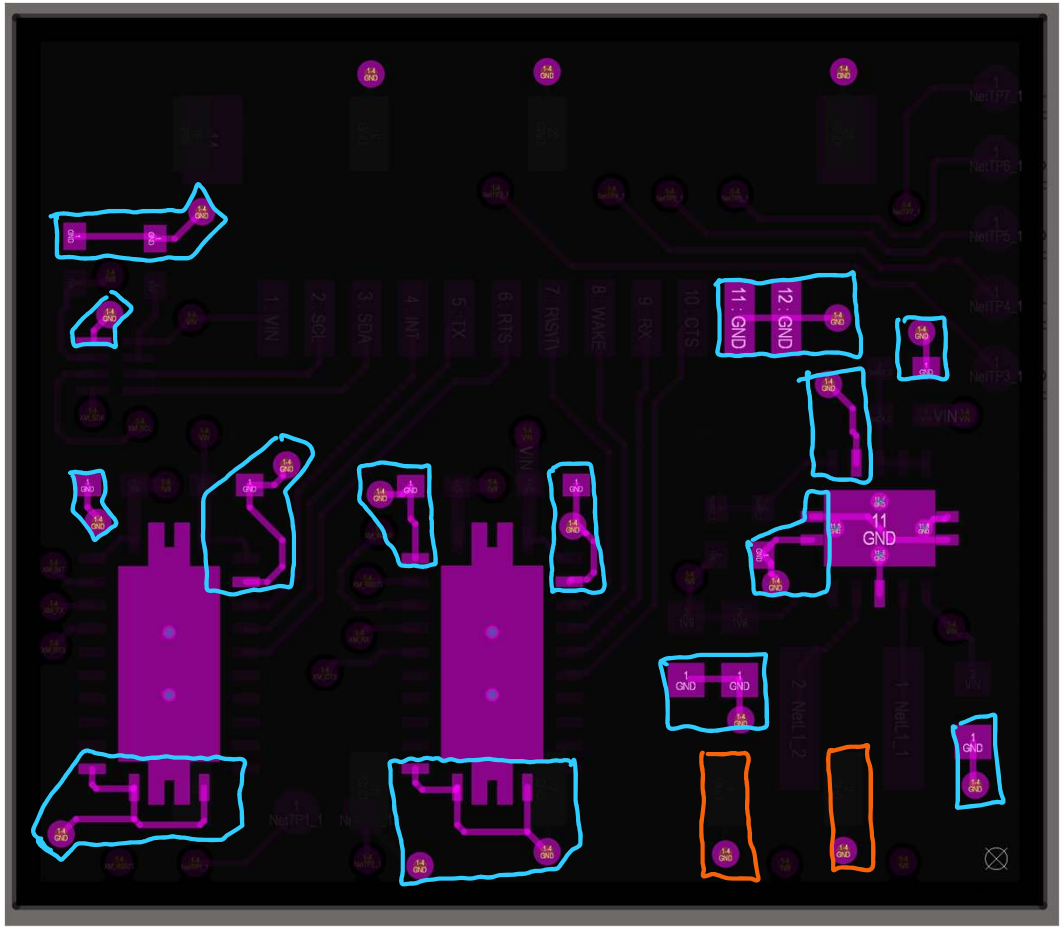

VIN

- Recommendations
  - Pour small power planes on primary / secondary sides for component connections.

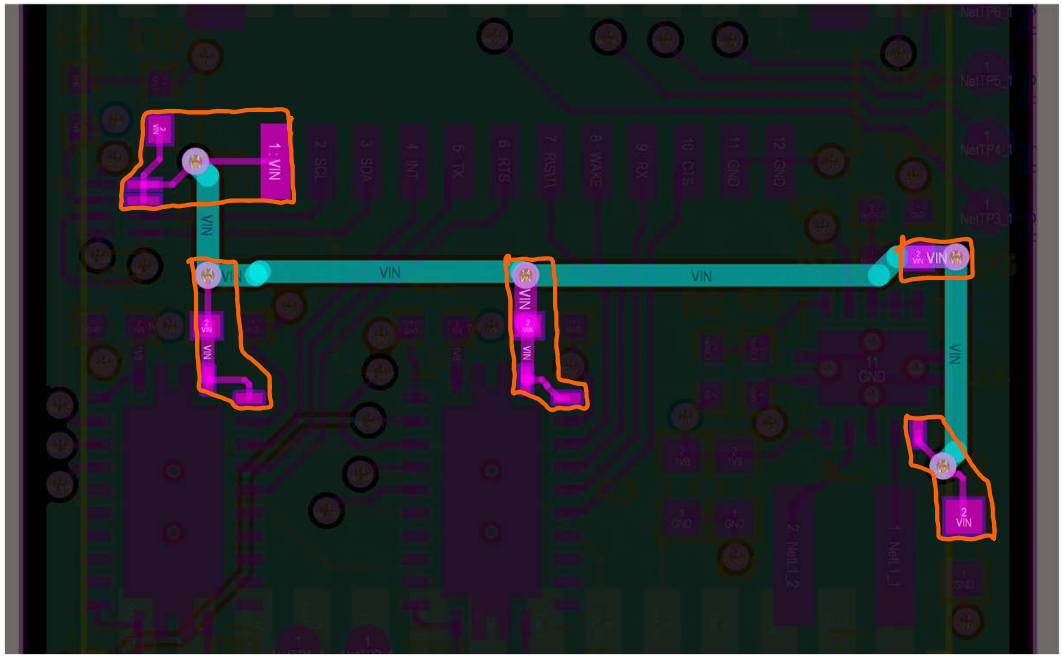

1V8

- Recommendations
  - Pour small power planes on primary / secondary sides for component connections.

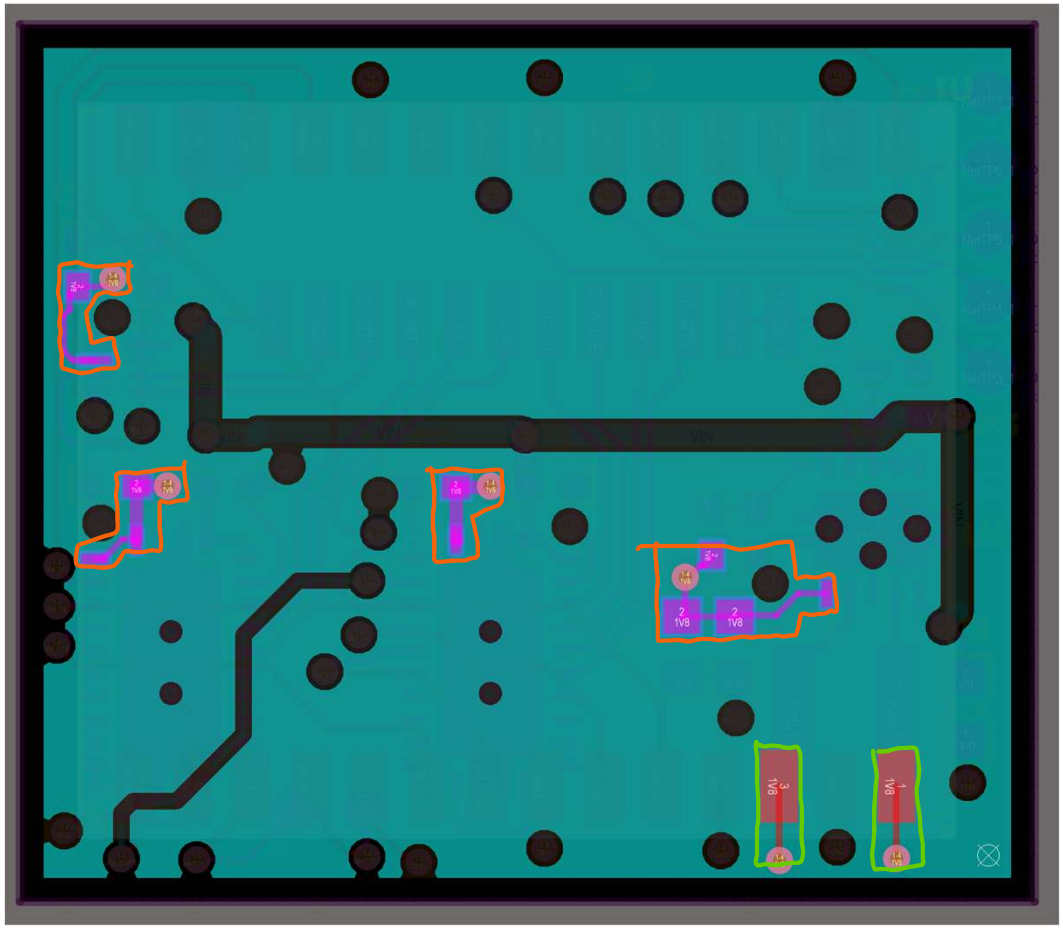

Proprietary and Confidential

Possible Stackup Improvement

Lower priority recommendation

Current stackup is okay.

Minor recommendation:

- Swap layer 2 / 3
- Reroute top layer to reference 1V8 exclusively (which will now be on layer 2). Ideally traces will always reference their own PWR / GND reference. (Top layer traces avoid VIN).

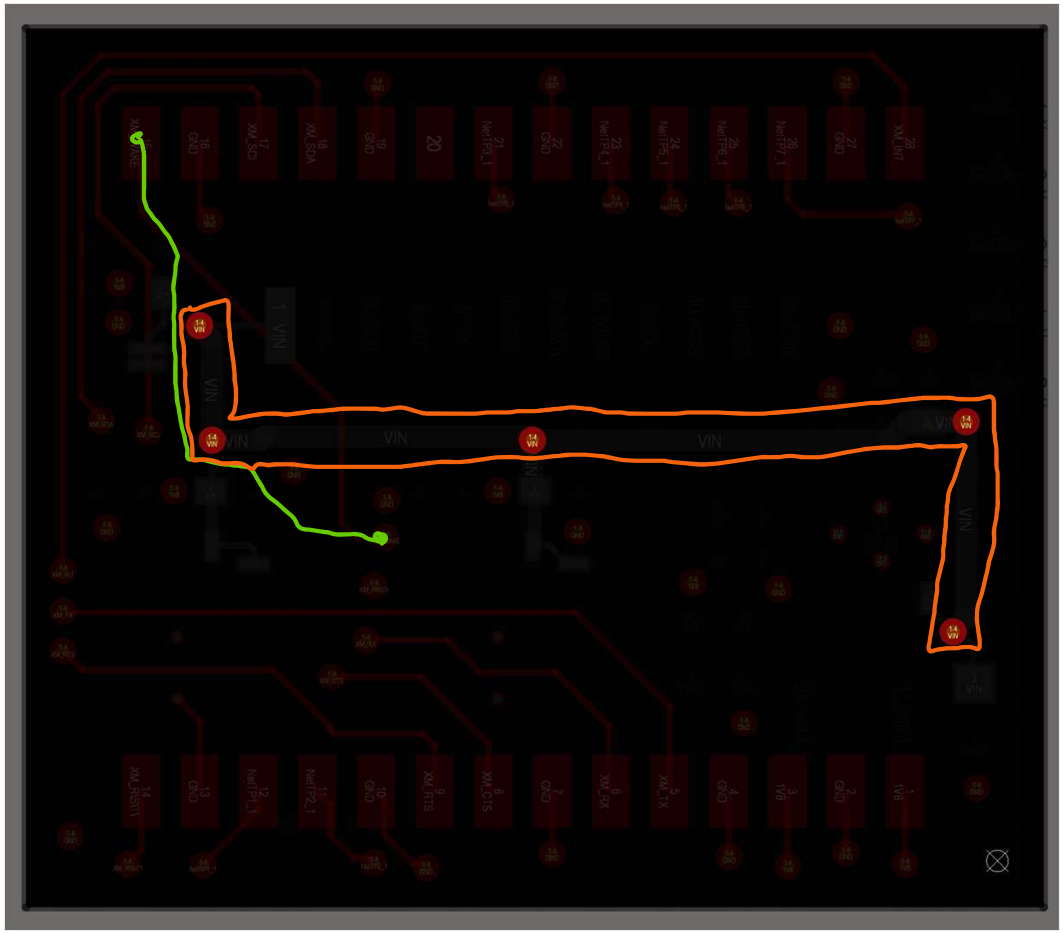

Proprietary and Confidential

Via size

Recommend to increase size of via. These highlighted via are 0.2mm which will increase cost and lead time. All other vias are 0.3mm which is a standard size.

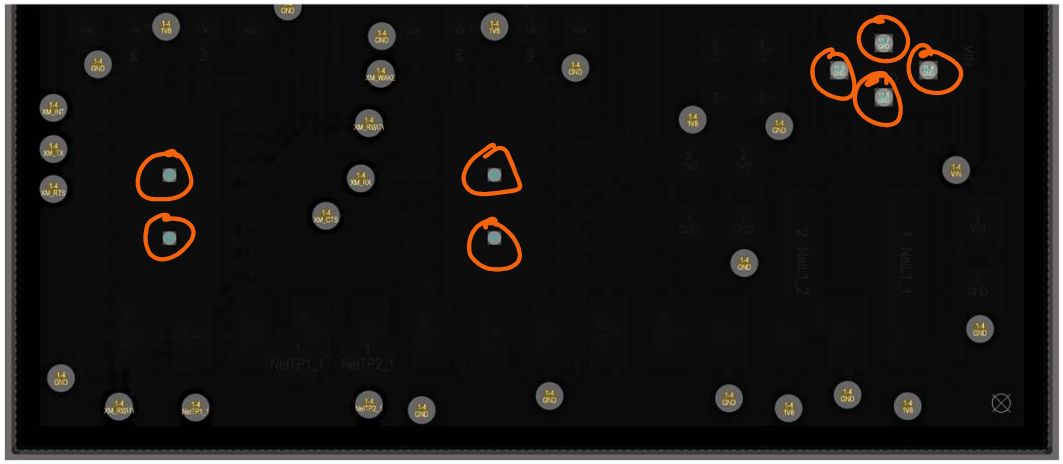

Thermal vias

Remove soldermask tenting from thermal vias to prevent outgassing issues when soldering thermal pads.

Alternatively use via-in-pad with epoxy filled vias.

Make sure exposed vias will not short to anything on the radar module.

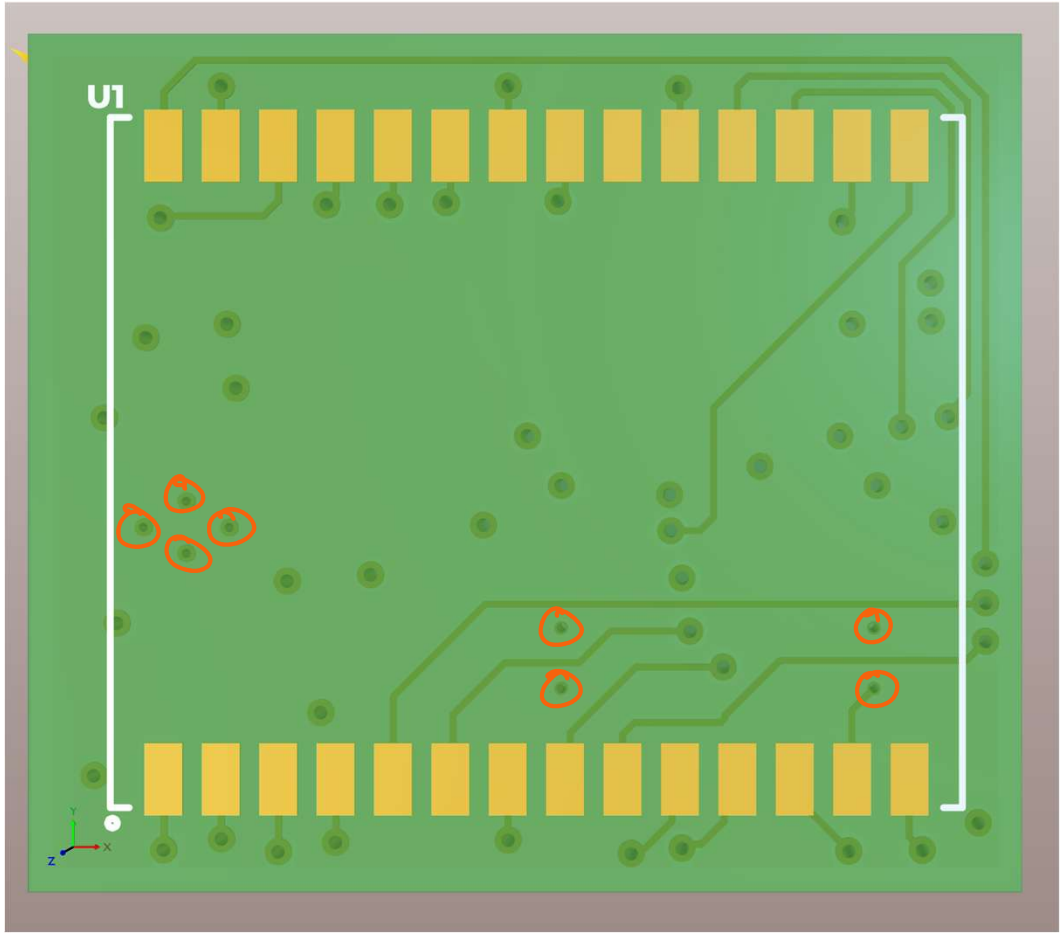

Proprietary and Confidential

XM125 Module Pinout

Pin Number	Signal	Comment
1	VIN	1.8 V or 3.3 V input A121 IO and MCU voltage
2	Ground	
3	1V8	1.8 V input A121 analog and digital voltage
4	Ground	
5	UART_TX	Connect to UART_RX on host side. Leave Not Connected if unused.
6	UART_RX	Connect to UART_TX on host side. Leave Not Connected if unused.
7	Ground	
8	UART_CTS	Connect to UART_RTS on host side. Leave Not Connected if unused.
9	UART_RTS	Connect to UART_CTS on host side. Leave Not Connected if unused.
10	Ground	
11	SWD_IO	Leave Not Connected if unused.
12	SWD_CLK	Leave Not Connected if unused.
13	Ground	
14	NRESET	Reset. Leave Not Connected if unused.
15	WAKE_UP	Could be used by host to wake up XM125 MCU. Leave Not Connected if unused.
16	Ground	
17	I2C_SCL	Leave Not Connected if unused.
18	I2C_SDA	Leave Not Connected if unused.
19	Ground	

Page 8 of 22 2023-10-04 © 2023 Copyright by Acconeer

Entry+ Module XM125
Datasheet, v1.2

20	I2C_ADDRESS	For configuration of I2C address. Leave Not Connected if unused.
21	DEBUG_UART_RX	Connect to UART_TX on host side. Leave Not Connected if unused.
22	Ground	
23	DEBUG_UART_TX	Connect to UART_RX on host side. Leave Not Connected if unused.
24	MISC_GPIO0	Leave Not Connected if unused.
25	MISC_GPIO1	Leave Not Connected if unused.
26	MISC_GPIO2_BOOT0	Pulling BOOT0 high during boot of module will start the embedded boot loader. Leave Not Connected if unused.
27	Ground	
28	MCU_INT	Could be used to send interrupt from MCU to host. Leave Not Connected if unused.

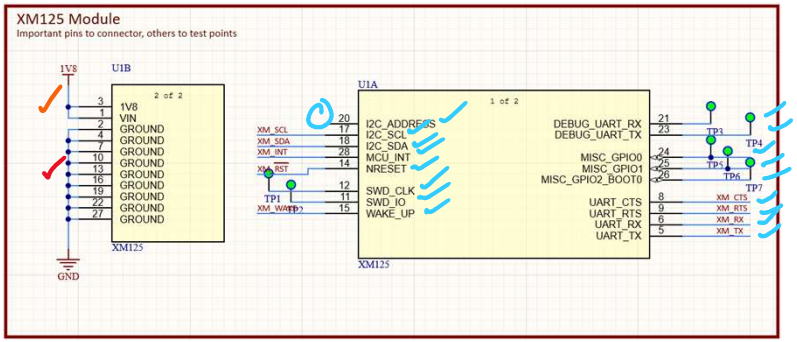

XM125 Module Pinout

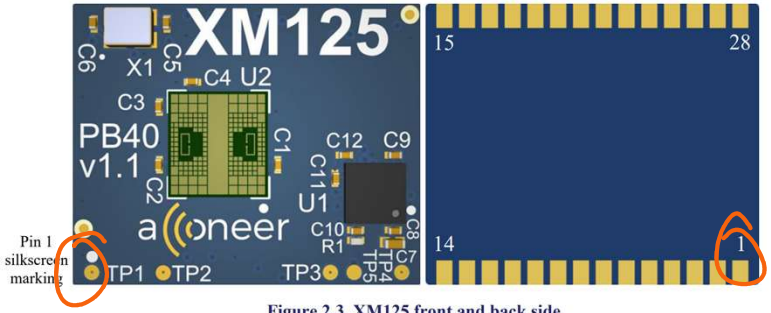

Figure 2.3. XM125 front and back side.

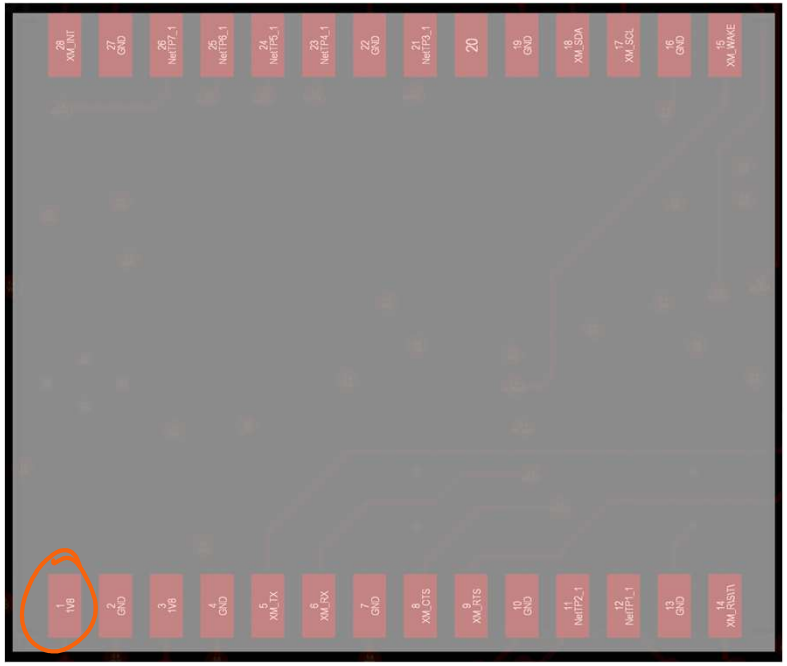

XM125 Module Footprint
Not per datasheet

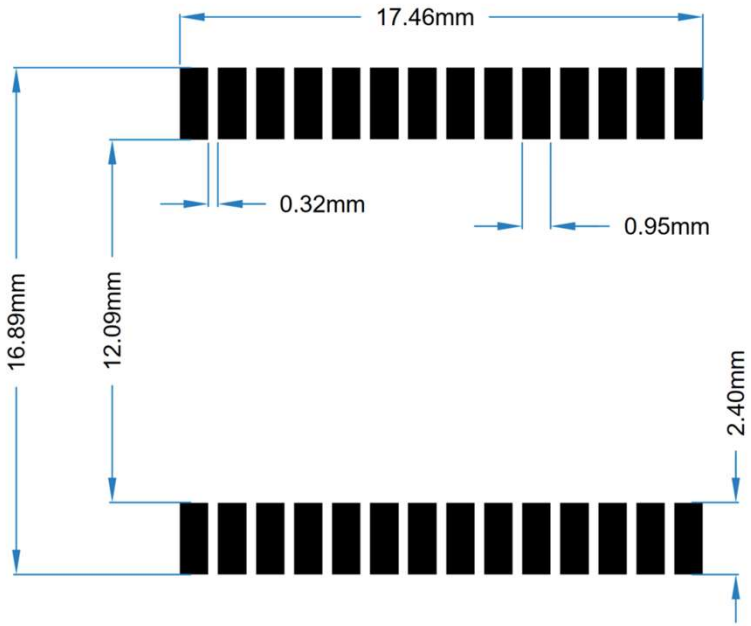

Figure 6.3. XM125 recommended footprint

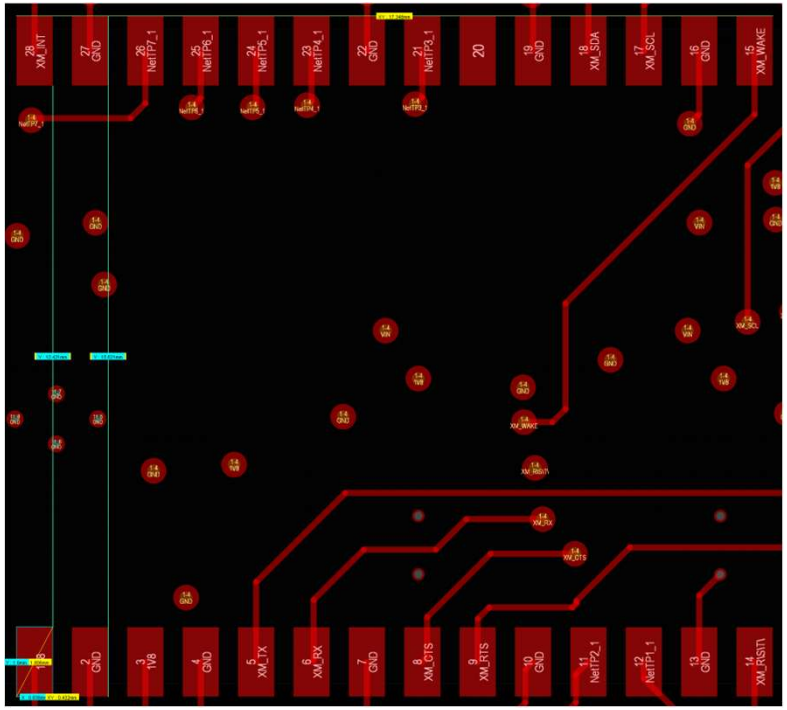

XM125 Module - MSL3 Handling JEDEC J-STD-033B Standards

6.1 Moisture Sensitivity Level and Recommended Reflow Profile

The XM125 module is moisture sensitive and need to be handled within proper Moisture Sensitive Level 3 (MSL3) guidelines to avoid damage from moisture absorption and exposure to solder reflow temperatures that can result in yield and reliability degradation.

Refer to IPC/JEDEC J-STD-033D for details regarding Handling, Packing, Shipping and Use of Moisture, Reflow, and Process Sensitive Devices.

XM125 is baked and dry-packed before shipment from Acconeer AB according to MSL3.

Maximum number of reflow passes recommended for XM125 is one (1).

It is recommended to use a reflow profile compatible with the IPC/JEDEC J-STD-020E classification profile.

Table 4-1 Reference Conditions for Drying Mounted or Unmounted SMD Packages (User Bake: Floor life begins counting at time = 0 after bake)

Package Body	Level	Bake @ 125°C		Bake @ 90°C ≤5% RH		Bake @ 40°C ≤5% RH	
		Exceeding Floor Life by >72 h	Exceeding Floor Life by ≤72 h	Exceeding Floor Life by >72 h	Exceeding Floor Life by ≤72 h	Exceeding Floor Life by >72 h	Exceeding Floor Life by ≤72 h
Thickness ≤1.4 mm	2	5 hours	3 hours	17 hours	11 hours	8 days	5 days
	2a	7 hours	5 hours	23 hours	13 hours	9 days	7 days
	3	9 hours	7 hours	33 hours	23 hours	13 days	9 days
	4	11 hours	7 hours	37 hours	23 hours	15 days	9 days
	5	12 hours	7 hours	41 hours	24 hours	17 days	10 days
	5a	16 hours	10 hours	54 hours	24 hours	22 days	10 days
Thickness >1.4 mm ≤2.0 mm	2	18 hours	15 hours	63 hours	2 days	25days	20 days
	2a	21 hours	16 hours	3 days	2 days	29 days	22 days
	3	27 hours	17 hours	4 days	2 days	37 days	23 days
	4	34 hours	20 hours	5 days	3 days	47 days	28 days
	5	40 hours	25 hours	6 days	4 days	57 days	35 days
	5a	48 hours	40 hours	8 days	6 days	79 days	56 days
Thickness >2.0 mm ≤4.5 mm	2	48 hours	48 hours	10 days	7 days	79 days	67 days
	2a	48 hours	48 hours	10 days	7 days	79 days	67 days
	3	48 hours	48 hours	10 days	8 days	79 days	67 days
	4	48 hours	48 hours	10 days	10 days	79 days	67 days
	5	48 hours	48 hours	10 days	10 days	79 days	67 days
	5a	48 hours	48 hours	10 days	10 days	79 days	67 days
BGA package >17 mm x 17 mm or any stacked die package (See Note 2)	2-6	96 hours	As above per package thickness and moisture level	Not applicable	As above per package thickness and moisture level	Not applicable	As above per package thickness and moisture level

Note 1: Table 4-1 is based on worst-case molded lead frame SMD packages. Users may reduce the actual bake time if technically justified (e.g., absorption/desorption data, etc.). In most cases it is applicable to other nonhermetic surface mount SMD packages.

Note 2: For BGA packages >17 mm x 17 mm, that do not have internal planes that block the moisture diffusion path in the substrate, may use bake times based on the thickness/moisture level portion of the table.

Note 3: If baking of packages >4.5 mm thick is required see appendix B.

Proprietary and Confidential

XM125 Module Power Consumption

4.3 Power consumption summary

Table 4 gives the power consumption and the idle current at T_A = 25ºC, 1.8 V supply.

Table 4. Power consumption and idle current.

Parameter	Min.	Typ.	Max.	Unit
Measurement range: 0.25 m[1], 0.1 Hz update rate		0.06		mW
Measurement range: 0.25 m[1], 1.0 Hz update rate		0.51		mW
Measurement range: 0.25 m[1], 10.0 Hz update rate		4.98		mW
Measurement range: 2.75 m, 0.1 Hz update rate		0.04		mW
Measurement range: 2.75 m, 1.0 Hz update rate		0.33		mW
Measurement range: 2.75 m, 10.0 Hz update rate		3.12		mW
Idle current, hibernate		17.7		µA
Idle current, off		6.90		µA

Configuration with Distance detector, profile 5 used.
STM M4 microcontroller is in sleep mode (Stop Mode 1) with full RAM retention and wake-up on RTC enabled.
[1]Measurement based on close range (0.05-0.3m).

Table 4.1 gives the current profile for measurement range 2.75m.

Figure 5.1. Current profile, measurement range 2.75m.

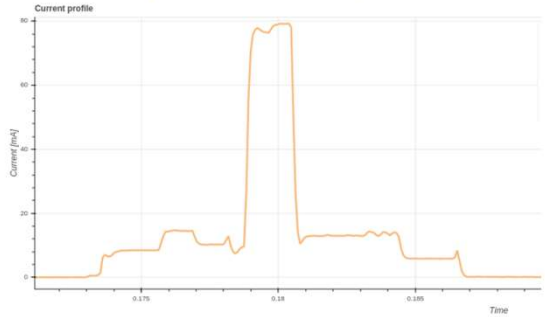

- Seems that it only needs ~100mA at 1.8V.
- Probably didn't need DCDC converter and could be okay with an LDO.
- No issues with current design.

Proprietary and Confidential

TPS63000DRCR Pinout

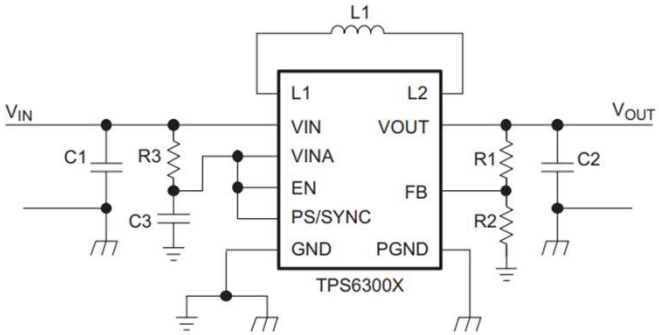

Figure 2. Typical Application Circuit for Adjustable Output Voltage Option

5 Pin Configuration and Functions

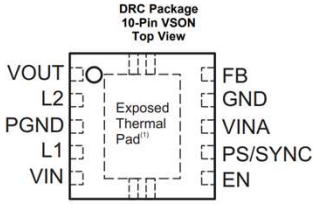

(1) The exposed thermal pad is connected to PGND.

Pin Functions

PIN		I/O	DESCRIPTION
NAME	NO.		
EN	6	IN	Enable input (1 enabled, 0 disabled)
FB	10	IN	Voltage feedback of adjustable versions, must be connected to VOUT on fixed output voltage versions
GND	9	—	Control / logic ground
L1	4	IN	Connection for inductor
L2	2	IN	Connection for inductor
PGND	3	—	Power ground
PS/SYNC	7	IN	Enable / disable power-save mode (1 disabled, 0 enabled, clock signal for synchronization)
VIN	5	IN	Supply voltage for power stage
VINA	8	IN	Supply voltage for control stage
VOUT	1	OUT	Buck-boost converter output
Exposed Thermal Pad	—	—	The exposed thermal pad is connected to PGND.

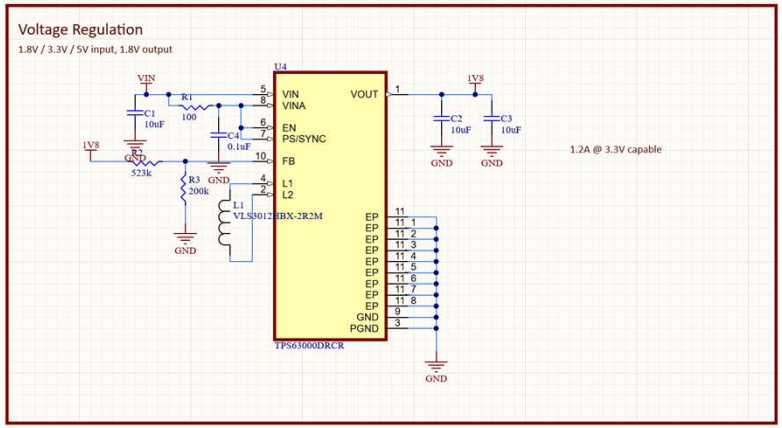

TPS63000DRCR Calculations

- 200k (1.8/0.5 - 1) = 520k

8.2.2.1 Programming the Output Voltage

Within the TPS6300x family, there are fixed and adjustable output voltage versions available. To properly configure the fixed output voltage devices, the FB pin is used to sense the output voltage. This means that it must be connected directly to VOUT. At the adjustable output voltage versions, an external resistor divider is used to adjust the output voltage. The resistor divider must be connected between VOUT, FB and GND. When the output voltage is regulated properly, the typical value of the voltage at the FB pin is 500 mV. The maximum recommended value for the output voltage is 5.5 V. The current through the resistive divider should be about 100 times greater than the current into the FB pin. The typical current into the FB pin is 0.01 µA, and the voltage across the resistor between FB and GND, R_2, is typically 500 mV. Based on those two values, the recommended value for R_2 should be lower than 500 kΩ, in order to set the divider current at 1 µA or higher. TI recommends to keep the value for this resistor in the range of 200 kΩ. From that, the value of the resistor connected between VOUT and FB, R_1, depending on the needed output voltage (V_{OUT}), can be calculated using Equation 1.

$$R_1 = R_2 \times \left(\frac{V_{OUT}}{V_{FB}} - 1 \right) \quad (1)$$

If as an example, an output voltage of 3.3 V is needed, a 1-MΩ resistor should be chosen for R_1. To improve control performance using a feedforward capacitor in parallel to R_1 is recommended. The value for the feedforward capacitor can be calculated using Equation 2.

$$C_{ff} = \frac{2.2\ \mu s}{R_1} \quad (2)$$

TPS63000DRCR Layout

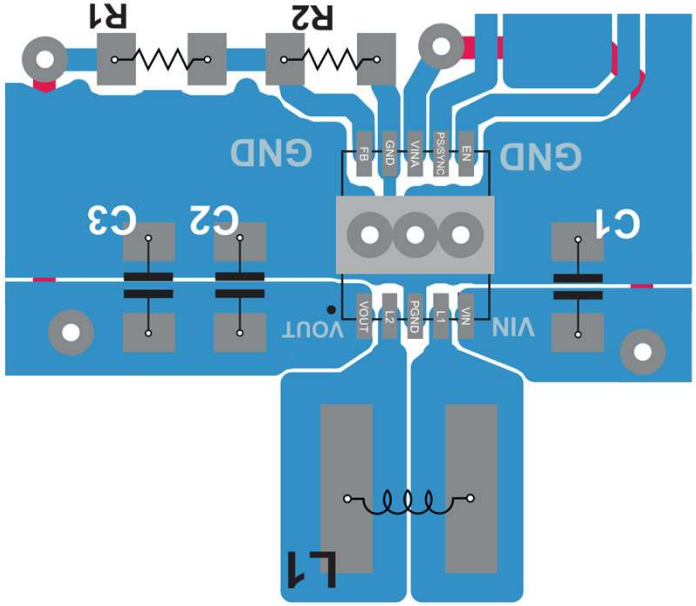

Figure 20. Layout Recommendation

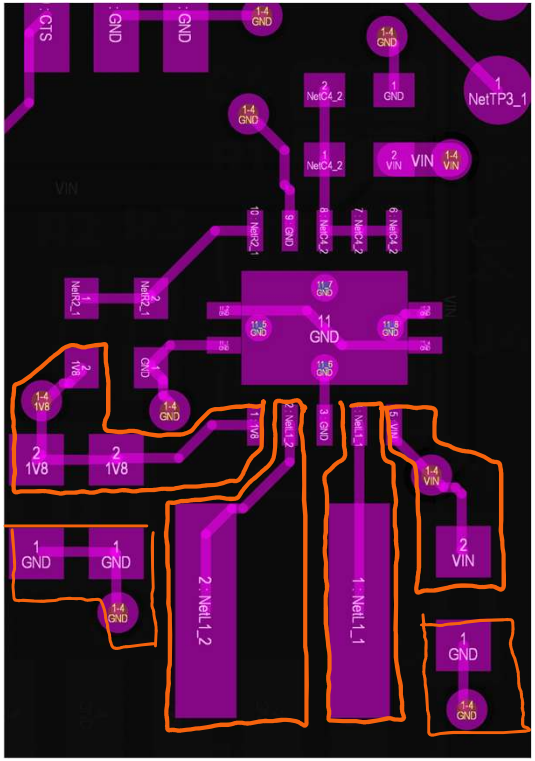

VLS3012HBX-2R2M

CHARACTERISTICS SPECIFICATION TABLE

L (μH)	Tolerance	L measuring frequency (MHz)	DC resistance (Ω)max.	DC resistance (Ω)typ.	Rated current* Isat (A)max.	Rated current* Itemp (A)max.	Rated current* Isat (A)typ.	Rated current* Itemp (A)typ.	Part No.
0.33	±30%	1	0.030	0.023	9.11	6.10	10.12	6.78	VLS3012HBX-R33N
0.47	±20%	1	0.035	0.027	7.46	5.32	8.29	5.91	VLS3012HBX-R47M
0.68	±20%	1	0.038	0.032	5.95	5.09	6.75	5.66	VLS3012HBX-R68M
1.0	±20%	1	0.047	0.039	5.50	4.62	6.11	5.13	VLS3012HBX-1R0M
1.5	±20%	1	0.067	0.056	4.41	3.77	4.90	4.19	VLS3012HBX-1R5M
2.2	±20%	1	0.106	0.088	3.35	2.84	3.76	3.15	VLS3012HBX-2R2M
3.3	±20%	1	0.150	0.130	2.82	2.37	3.22	2.63	VLS3012HBX-3R3M
4.7	±20%	1	0.201	0.175	2.51	2.01	2.79	2.23	VLS3012HBX-4R7M
6.8	±20%	1	0.285	0.248	1.98	1.66	2.24	1.84	VLS3012HBX-6R8M
10	±20%	1	0.415	0.361	1.70	1.33	1.89	1.48	VLS3012HBX-100M
15	±20%	1	0.636	0.553	1.37	1.11	1.52	1.23	VLS3012HBX-150M
22	±20%	1	0.761	0.662	1.09	1.01	1.21	1.12	VLS3012HBX-220M

* Rated current: smaller value of either Isat or Itemp.
Isat: When based on the inductance change rate (30% below the initial L value)
Itemp: When based on the temperature increase (temperature increase of 40°C by self heating)

8.2.2.2 Inductor Selection

The inductor selection is affected by several parameter like inductor ripple current, output voltage ripple, transition point into power-save mode, and efficiency. See Table 2 for typical inductors.

Table 2. List of Recommended Inductors

VENDOR	INDUCTOR SERIES
Coilcraft	LPS3015
	LPS4012
Murata	LQH3NP
Tajo Yuden	NR3015
TDK	VLF3215
	VLF4012

For high efficiencies, the inductor should have a low DC resistance to minimize conduction losses. Especially at high-switching frequencies, the core material has a high impact on efficiency. When using small chip inductors, the efficiency is reduced mainly due to higher inductor core losses. This needs to be considered when selecting the appropriate inductor. The inductor value determines the inductor ripple current. The larger the inductor value, the smaller the inductor ripple current and the lower the conduction losses of the converter. Conversely, larger inductor values cause a slower load transient response. To avoid saturation of the inductor, the peak current for the inductor in steady-state operation is calculated using Equation 4. Only the equation which defines the switch current in boost mode is shown, because this provides the highest value of current and represents the critical current value for selecting the right inductor.

Copyright © 2006–2015, Texas Instruments Incorporated

Duty Cycle Boost $$D = \frac{V_{OUT} - V_{IN}}{V_{OUT}} \quad (3)$$

$$I_{PEAK} = \frac{Iout}{\eta \times (1 - D)} + \frac{Vin \times D}{2 \times f \times L}$$

where

- D = Duty Cycle in Boost mode
- f = Converter switching frequency (typical 2.5MHz)
- L = Inductor value
- η = Estimated converter efficiency (use the number from the efficiency curves or 0.90 as an assumption) (4)

NOTE
The calculation must be done for the minimum input voltage which is possible to have in boost mode.

Calculating the maximum inductor current using the actual operating conditions gives the minimum saturation current of the inductor needed. ITI recommends to choose an inductor with a saturation current 20% higher than the value calculated using Equation 4. Possible inductors are listed in Table 2.

Proprietary and Confidential

VLS3012HBX-2R2M

RECOMMENDED LAND PATTERN

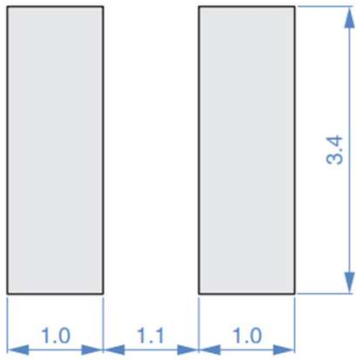

Dimensions in mm

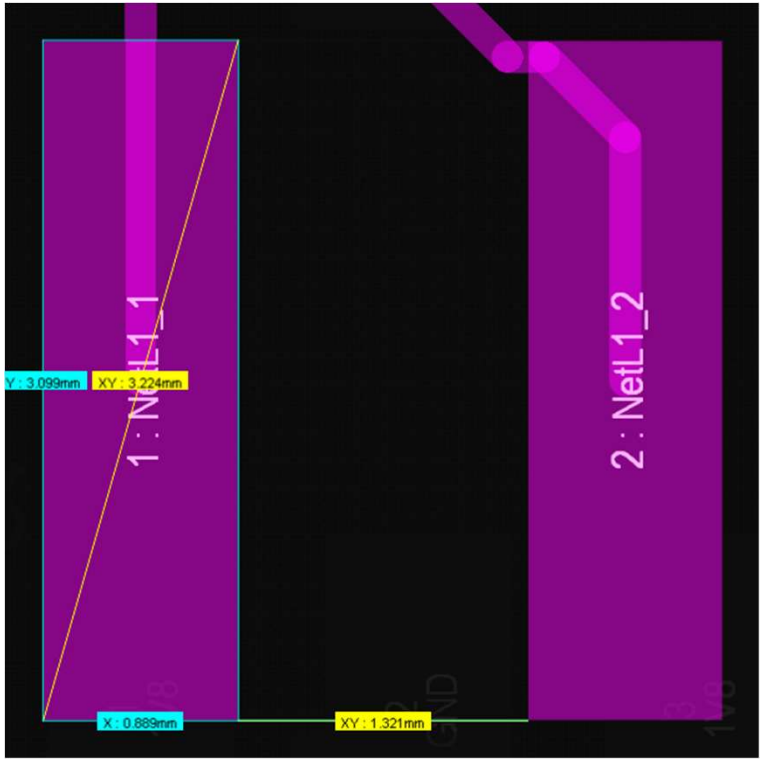

Proprietary and Confidential

SM12B-SRSS-TBLFSN

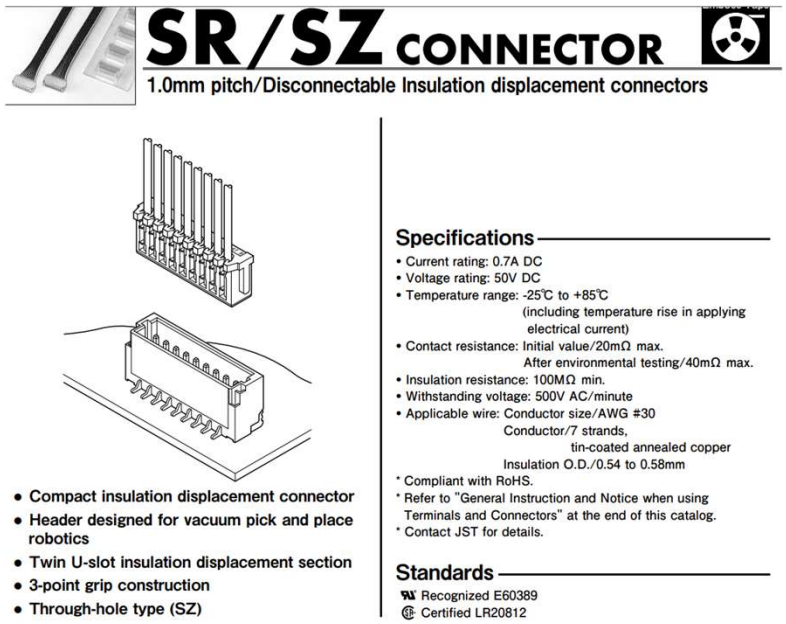

SR/SZ CONNECTOR

1.0mm pitch/Disconnectable Insulation displacement connectors

- Compact insulation displacement connector
- Header designed for vacuum pick and place robotics
- Twin U-slot insulation displacement section
- 3-point grip construction
- Through-hole type (SZ)

Specifications

- Current rating: 0.7A DC
- Voltage rating: 50V DC
- Temperature range: -25℃ to +85℃ (including temperature rise in applying electrical current)
- Contact resistance: Initial value/20mΩ max. After environmental testing/40mΩ max.
- Insulation resistance: 100MΩ min.
- Withstanding voltage: 500V AC/minute
- Applicable wire: Conductor size/AWG #30 Conductor/7 strands, tin-coated annealed copper Insulation O.D./0.54 to 0.58mm

* Compliant with RoHS.
* Refer to "General Instruction and Notice when using Terminals and Connectors" at the end of this catalog.
* Contact JST for details.

Standards

Recognized E60389
Certified LR20812

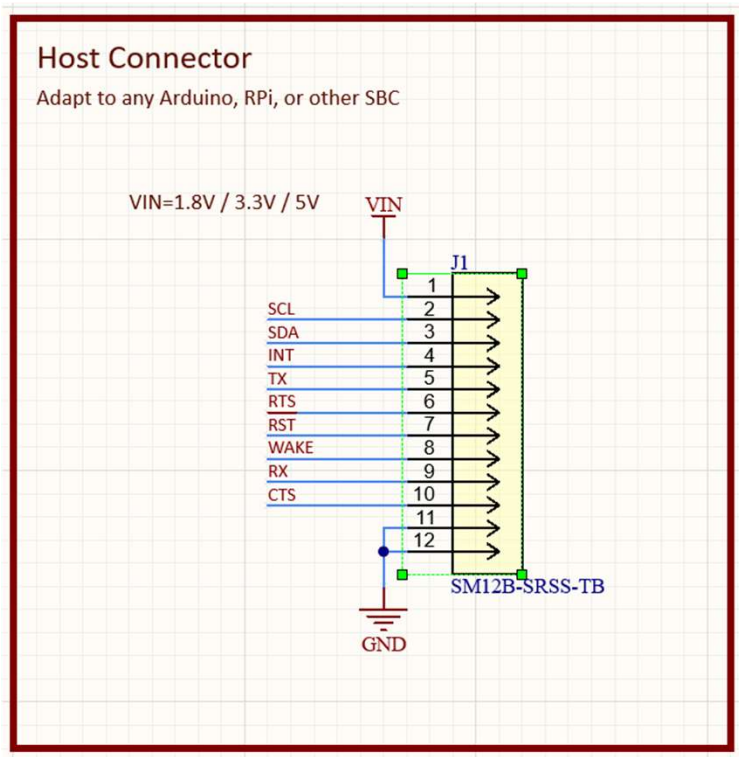

SM12B-SRSS-TBLFSN Footprint

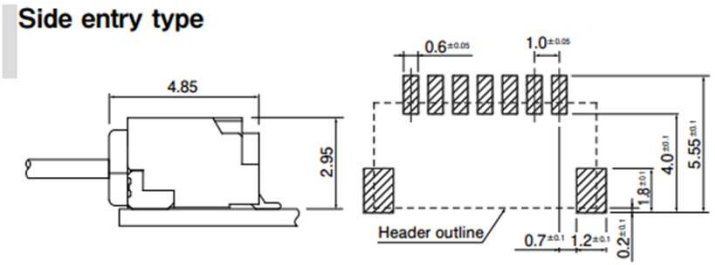

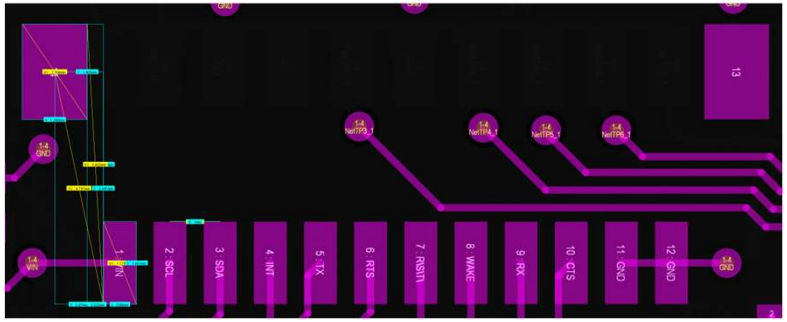

Recommendation TVS Diodes

TVS diodes on all inputs

Breakdown set to maximum input voltage

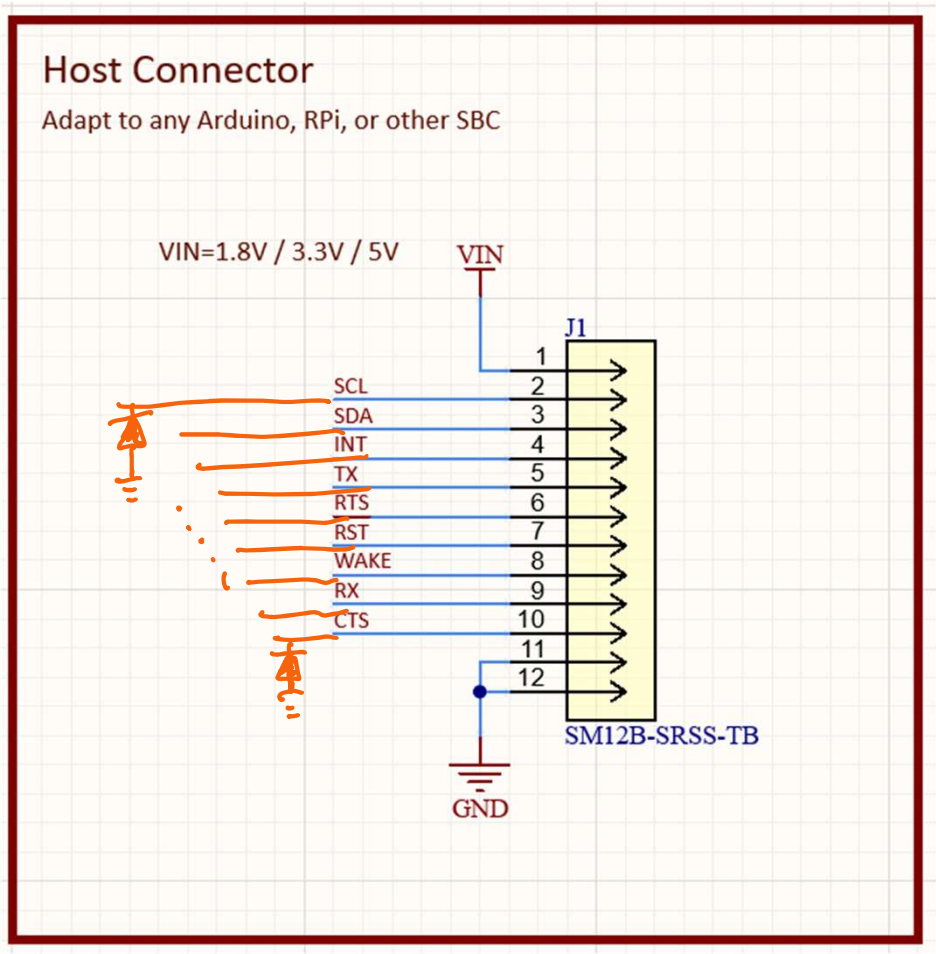

PCA9306DQER Pinout

5 Pin Configuration and Functions

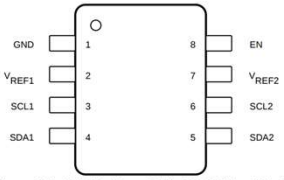

Figure 5-1. DCT Package 8-Pin SSOP (Top View)

Figure 5-2. DCU Package 8-Pin VSSOP (Top View)

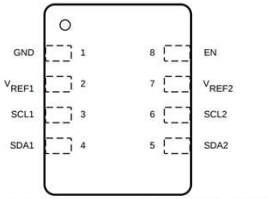

Figure 5-3. DQE Package 8-Pin X2SON (Top View)

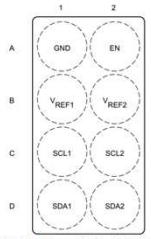

Figure 5-4. YZT Package 8-Pin DSBGA (Top View)

Table 5-1. Pin Functions

PIN			I/O	DESCRIPTION
NAME	NO.			
	DCT, DCU, DQE	YZT		
EN	8	A2	I	Switch enable input
GND	1	A1	—	Ground, 0 V
SCL1	3	C1	I/O	Serial clock, low-voltage side
SCL2	6	C2	I/O	Serial clock, high-voltage side
SDA1	4	D1	I/O	Serial data, low-voltage side
SDA2	5	D2	I/O	Serial data, high-voltage side
V_{REF1}	2	B1	I	Low-voltage-side reference supply voltage for SCL1 and SDA1
V_{REF2}	7	B2	I	High-voltage-side reference supply voltage for SCL2 and SDA2

- Allows voltage-level translation between
  - 1.2-V V_{REF1} and 1.8-V, 2.5-V, 3.3-V, or 5-V V_{REF2}
  - 1.8-V V_{REF1} and 2.5-V, 3.3-V, or 5-V V_{REF2}
  - 2.5-V V_{REF1} and 3.3-V or 5-V V_{REF2}
  - 3.3-V V_{REF1} and 5-V V_{REF2}

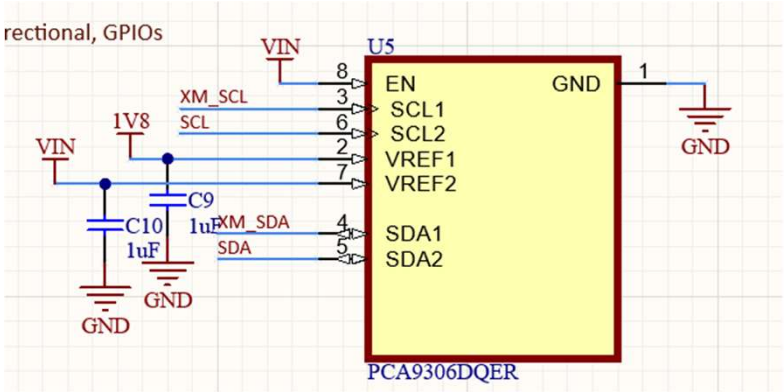

PCA9306DQER

Missing Current Limiting Resistor

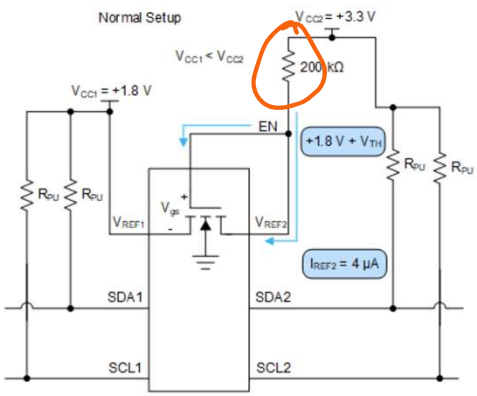

Figure 8-1. Normal Setup

Care should be taken to make sure V_{REF2} has an external resistor tied between it and V_{CC2}. If V_{REF2} is tied directly to the V_{CC2} rail without a resistor, then there is no external resistance from the V_{CC2} to V_{CC1} to limit the current such as in Figure 8-2. This effectively looks like a low impedance path for current to travel through and potentially break the pass FET if the current flowing through the pass FET is larger than the absolute maximum continuous channel current specified in section 6.1. The continuous channel current is larger with a higher voltage difference between V_{CC1} and V_{CC2}.

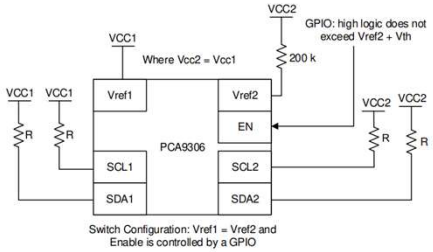

Figure 8-5. Switch Configuration

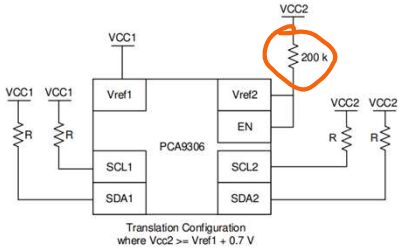

Figure 8-6. Translation Configuration

When PCA9306 is in the switch configuration (V_{REF1} = V_{REF2}), the propagation delays are different compared to the translator configuration. Taking a look at the propagation delays, if the pull up resistance and capacitance on both sides of the bus are equal, then in switch mode the PCA9306 has the same propagation delay from side one to two and side two to one. The propagation delays become lower when V_{CC1}/V_{CC2} is larger. For example, the propagation delay at 1.8 V is longer than at 5 V in the switching configuration. When PCA9306 is in translation mode, side one propagate lows to side two faster than side two can propagate lows to side 1. This time difference becomes larger the larger the difference between V_{CC2} and V_{CC1} becomes.

PCA9306DQER
Missing Pull-up Resistors

8.4 Device Functional Modes

INPUT EN(1)	TRANSLATOR FUNCTION
H	Logic Lows are propagated from one side to the other, Logic Highs blocked (independent pull up resistors passively drive the line high)
L	Disconnect

(1) The SCL switch conducts if EN is ≥ 0.6 V higher than SCL1 or SCL2. The same is true of SDA.

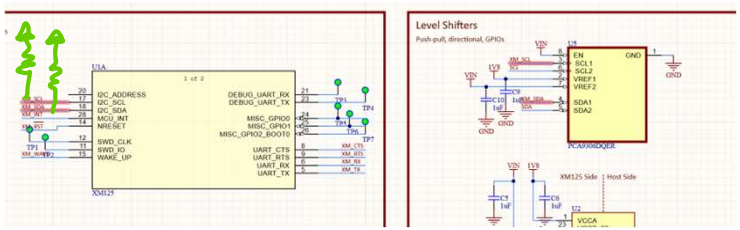

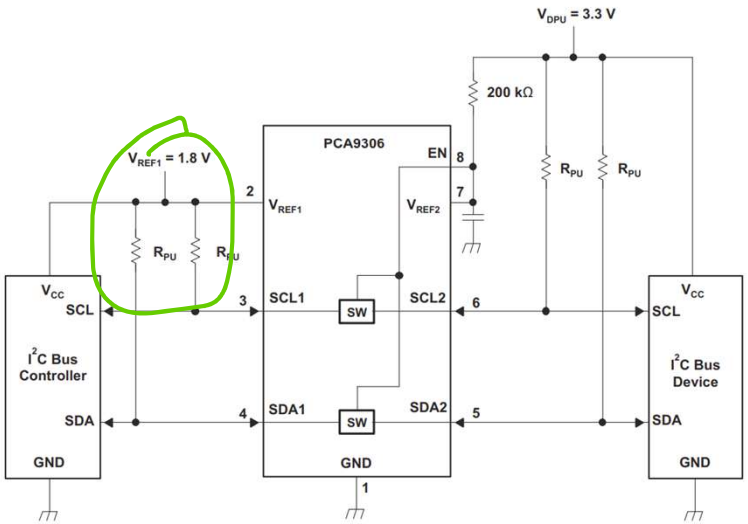

Figure 9-1. Typical Application Circuit (Switch Always Enabled)

SN74LVC8T245RHLR
Check DIR setting.

8.1 Overview

The SN74LVC8T245 is an eight bit non-inverting bus transceiver with configurable dual power supply rails that enables bidirectional voltage level translation. Pin Ax and direction control pin are support by V_{CCA} and pin Bx is support by V_{CCB}. The A port is able to accept I/O voltages ranging from 1.65 V to 5.5 V, while the B port can accept I/O voltages from 1.65 V to 5.5 V. The high on DIR allows data transmission from A to B and a low on DIR allows data transmission from B to A. For voltage level translation below 1.65 V, see TI AXC products.

8.2 Functional Block Diagram

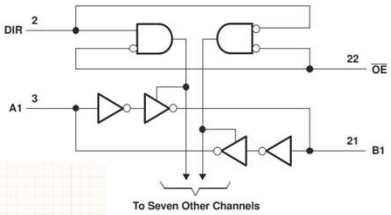

5 Pin Configuration and Functions

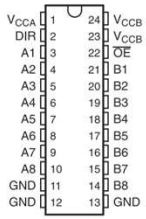

Figure 5-1. DW, NS, DB, DBQ, DGV, or PW Package, 24-Pin SOIC, SO, SSOP, SSOP, TVSOP, or TSSOP (Top View)

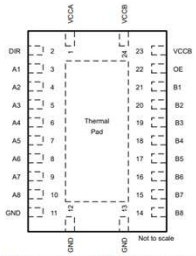

Figure 5-2. RHL Package, 24-Pin VQFN (Top View)

Table 5-1. Pin Functions

PIN		TYPE[1]	DESCRIPTION
NAME	NO.		
A1	3	I/O	Input/output A1. Referenced to V_{CCA}.
A2	4	I/O	Input/output A2. Referenced to V_{CCA}.
A3	5	I/O	Input/output A3. Referenced to V_{CCA}.
A4	6	I/O	Input/output A4. Referenced to V_{CCA}.
A5	7	I/O	Input/output A5. Referenced to V_{CCA}.
A6	8	I/O	Input/output A6. Referenced to V_{CCA}.
A7	9	I/O	Input/output A7. Referenced to V_{CCA}.
A8	10	I/O	Input/output A8. Referenced to V_{CCA}.
B1	21	I/O	Input/output B1. Referenced to V_{CCB}.
B2	20	I/O	Input/output B2. Referenced to V_{CCB}.
B3	19	I/O	Input/output B3. Referenced to V_{CCB}.
B4	18	I/O	Input/output B4. Referenced to V_{CCB}.
B5	17	I/O	Input/output B5. Referenced to V_{CCB}.
B6	16	I/O	Input/output B6. Referenced to V_{CCB}.
B7	15	I/O	Input/output B7. Referenced to V_{CCB}.
B8	14	I/O	Input/output B8. Referenced to V_{CCB}.
DIR	2	I	Direction-control signal.
GND	11, 12, 13	G	Ground
$\overline{OE}$	22	I	3-state output-mode enables. Pull $\overline{OE}$ high to place all outputs in 3-state mode. Referenced to V_{CCA}.
V_{CCA}	1	P	A-port supply voltage. 1.65 V ≤ V_{CCA} ≤ 5.5 V
V_{CCB}	23, 24	P	B-port supply voltage. 1.65 V ≤ V_{CCB} ≤ 5.5 V
Thermal Pad[2]		—	

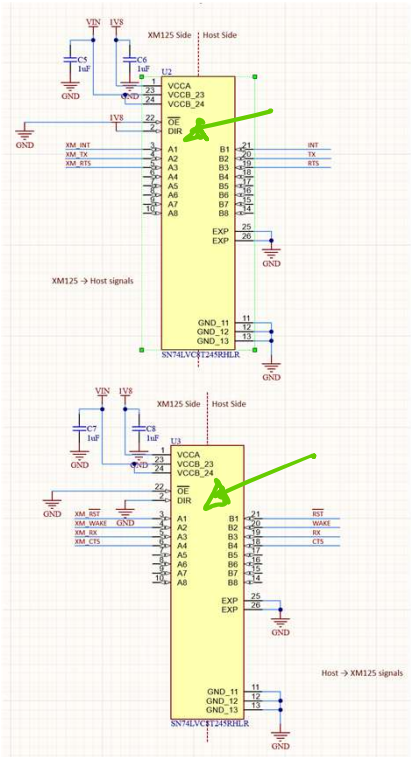

SN74LVC8T245RHLR
Bias unused inputs
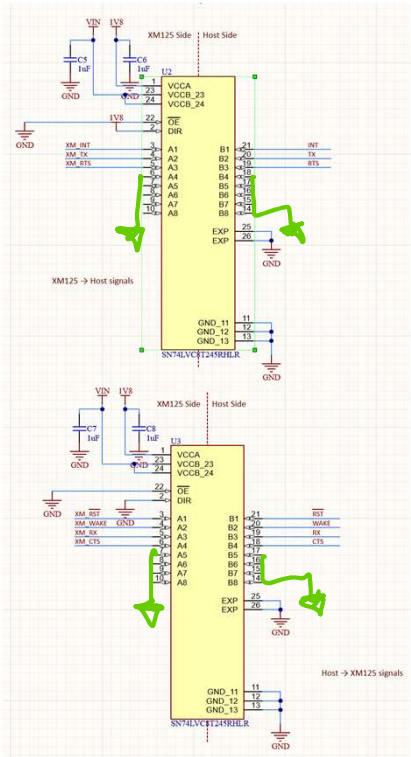
(2) V_{CCO} is the V_{CC} associated with the output port.
(3) All unused or driven (floating) data inputs (I/Os) of the device must be held at logic HIGH or LOW (preferably V_{CCI} or GND) to ensure proper device operation and minimize power. Refer to the TI application report, *Implications of Slow or Floating CMOS Inputs*, literature number SCBA004.
(4) All unused control inputs must be held at V_{CCA} or GND to ensure proper device operation and minimize power comsumption.