High Altitude Balloon 1

Light Unmanned Free Balloon project,

System's Report.

Space Club,

Center for Innovation, Incubation and Entrepreneurship Development,

Rajarambapu Institute of Technology, Islampur.

March 10, 2018

Table of Contents

1. On Board computer
2. Payload
3. Power
4. Structure
5. Assembly
6. Operations and Recovery

On Board computer :

Arduino Uno :

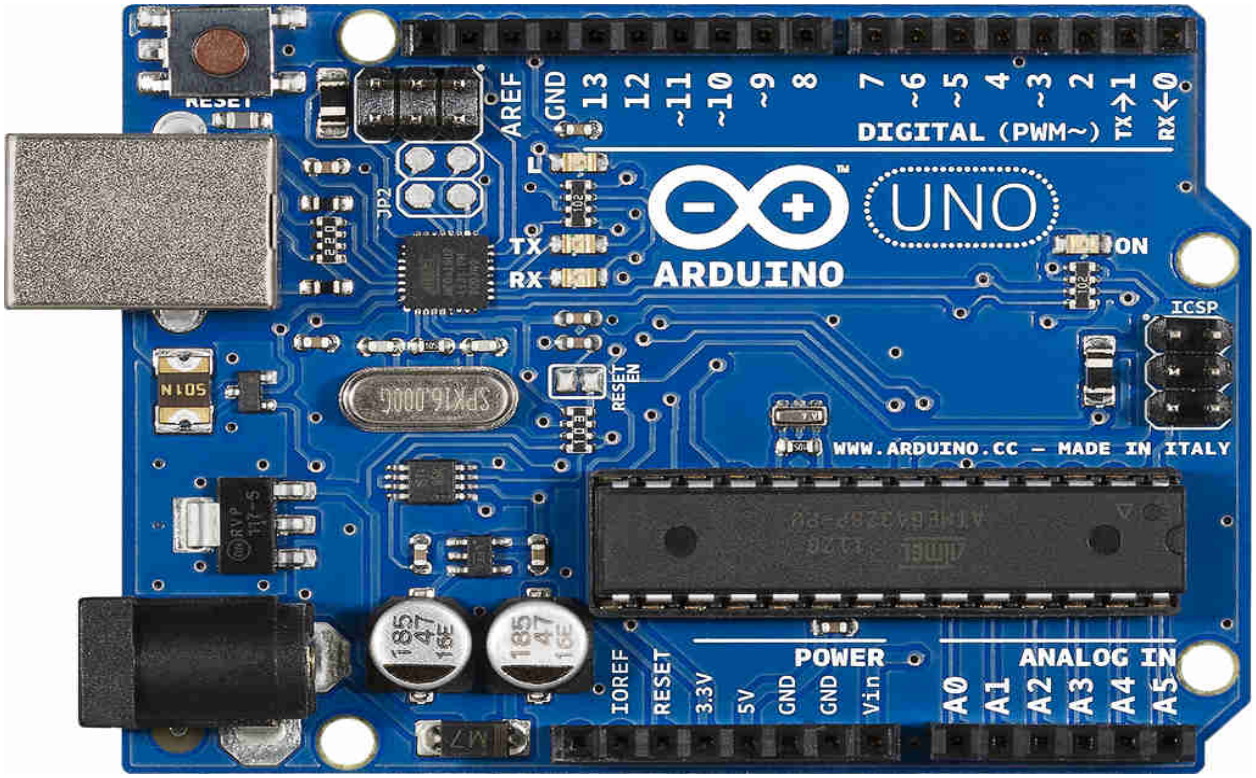

Pin Diagram:

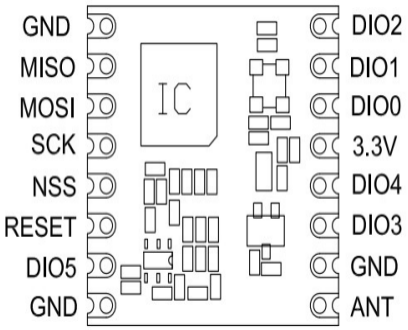

1.

Block Diagram:

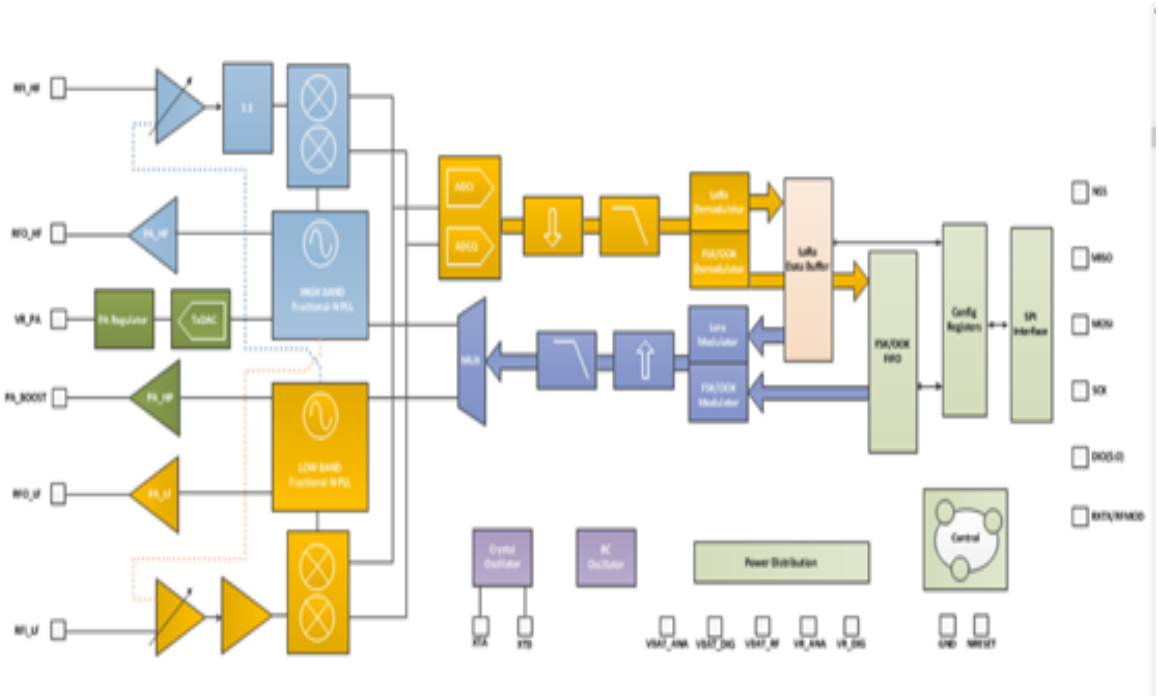

The LoRa Shield based on RFM98W targets professional wireless sensor network applications such as irrigation systems, smart metering, smart cities, smartphone detection, building automation, and so on.

Using Hope RF's patented LoRa™ modulation technique the LoRa Shield can achieve a sensitivity of over -148dBm using a low cost crystal and bill of materials. The high sensitivity combined with the integrated +20 dBm power amplifier yields industry leading link budget making it optimal for any application requiring range or robustness. LoRa™ also provides significant advantages in both blocking and selectivity over conventional modulation techniques, solving the traditional design compromise between range, interference immunity and energy consumption.

These devices also support high performance (G)FSK modes for systems including WMBus, IEEE802.15.4g. The LoRa Shield deliver exceptional phase noise, selectivity, receiver linearity and IIP3 for significantly lower current consumption than competing devices.

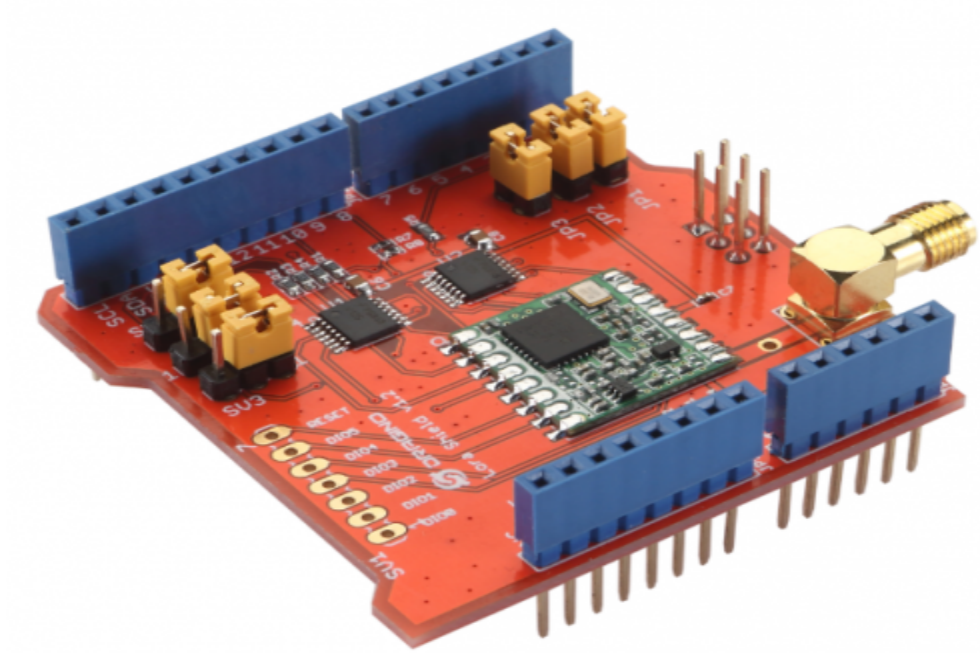

Fig: RF98 LoRa Shield.

The Global Positioning System (GPS) is a satellite-based navigation system made up of at least 24 satellites. GPS works in any weather conditions, anywhere in the world, 24 hours a day, with no subscription fees or setup charges

GPS satellites circle the Earth twice a day in a precise orbit. Each satellite transmits a unique signal and orbital parameters that allow GPS devices to decode and compute the precise location of the satellite. GPS receivers use this information and trilateration to calculate a user's exact location. Essentially, the GPS receiver measures the distance to each satellite by the amount of time it takes to receive a transmitted signal. With distance measurements from a few more satellites, the receiver can determine a user's position and display it.

FEATURES

- ❑ Compatible with 3.3v or 5v I/O Arduino Board.
- ❑ Frequency Band: 868 MHZ/433 MHZ (Pre-configure in factory)
- ❑ Low power consumption.
- ❑ Compatible with Arduino Leonardo, Uno, Mega, DUE.
- ❑ External Antenna via I-Pex connector.

SPECIFICATION

- 168 dB maximum link budget.
- +20 dBm - 100 mW constant RF output vs.
- +14 dBm high efficiency PA.
- Programmable bit rate up to 300 kbps.
- High sensitivity: down to -148 dBm.
- Bullet-proof front end: IIP3 = -12.5 dBm.
- Excellent blocking immunity.
- Low RX current of 10.3 mA, 200 nA register retention.
- Fully integrated synthesizer with a resolution of 61 Hz.
- FSK, GFSK, MSK, GMSK, LoRa™ and OOK modulation.
- Built-in bit synchronizer for clock recovery.
- Preamble detection.
- 127 dB Dynamic Range RSSI.
- Automatic RF Sense and CAD with ultra-fast AFC.
- Packet engine up to 256 bytes with CRC.
- Built-in temperature sensor and low battery indicator.

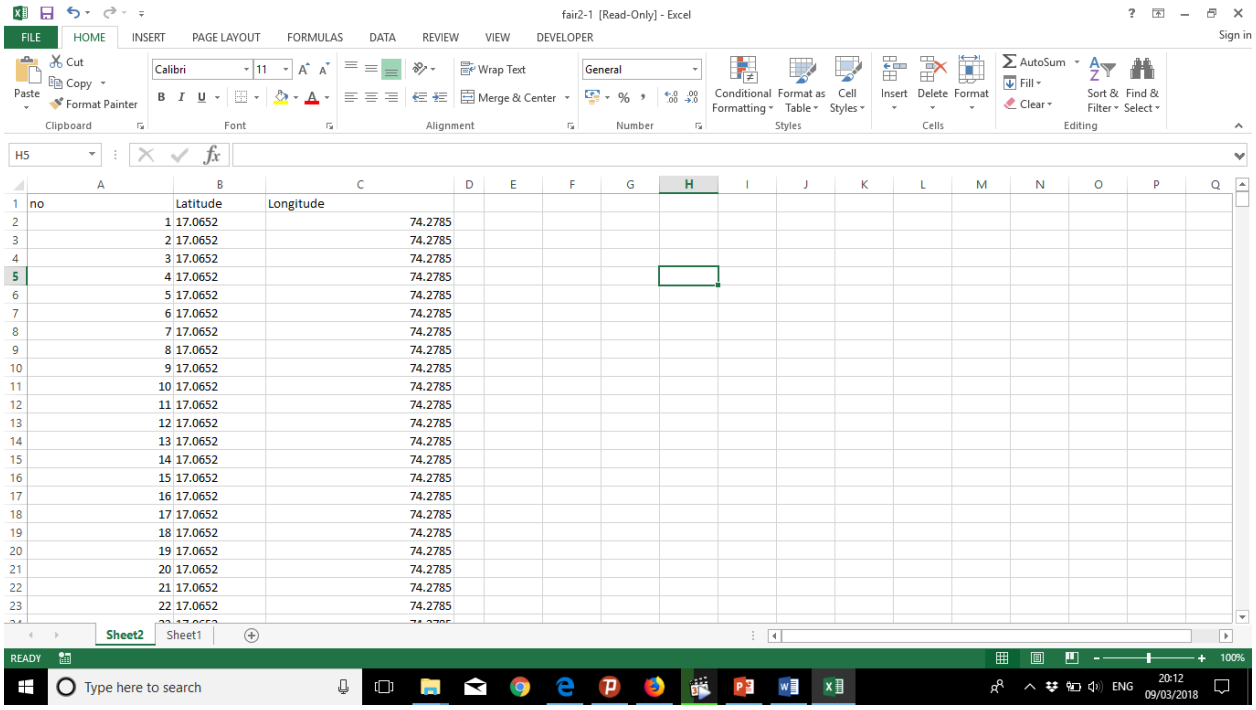

no	Latitude	Longitude
1	17.0652	74.2785
2	17.0652	74.2785
3	17.0652	74.2785
4	17.0652	74.2785
5	17.0652	74.2785
6	17.0652	74.2785
7	17.0652	74.2785
8	17.0652	74.2785
9	17.0652	74.2785
10	17.0652	74.2785
11	17.0652	74.2785
12	17.0652	74.2785
13	17.0652	74.2785
14	17.0652	74.2785
15	17.0652	74.2785
16	17.0652	74.2785
17	17.0652	74.2785
18	17.0652	74.2785
19	17.0652	74.2785
20	17.0652	74.2785
21	17.0652	74.2785
22	17.0652	74.2785

Fig : Excel sheet of Received Data

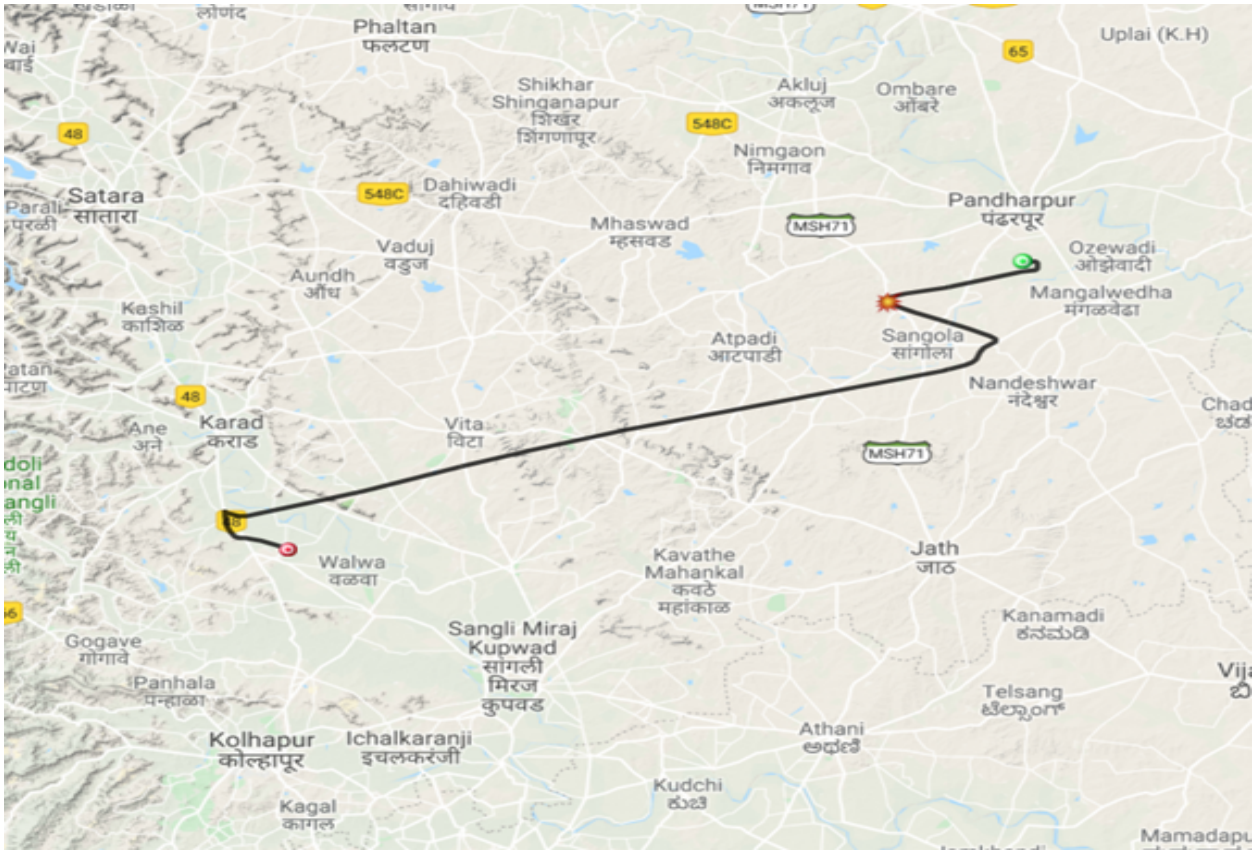

Fig: Predicted Path

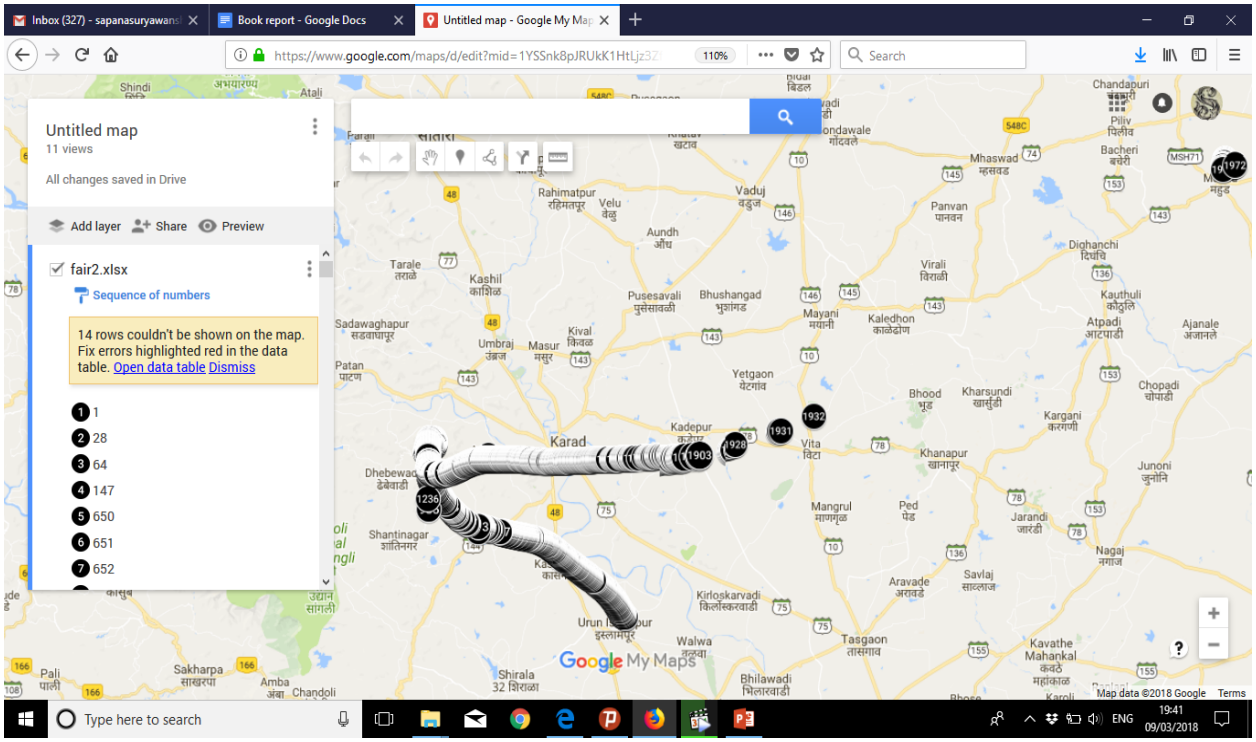

Fig : Balloon Path

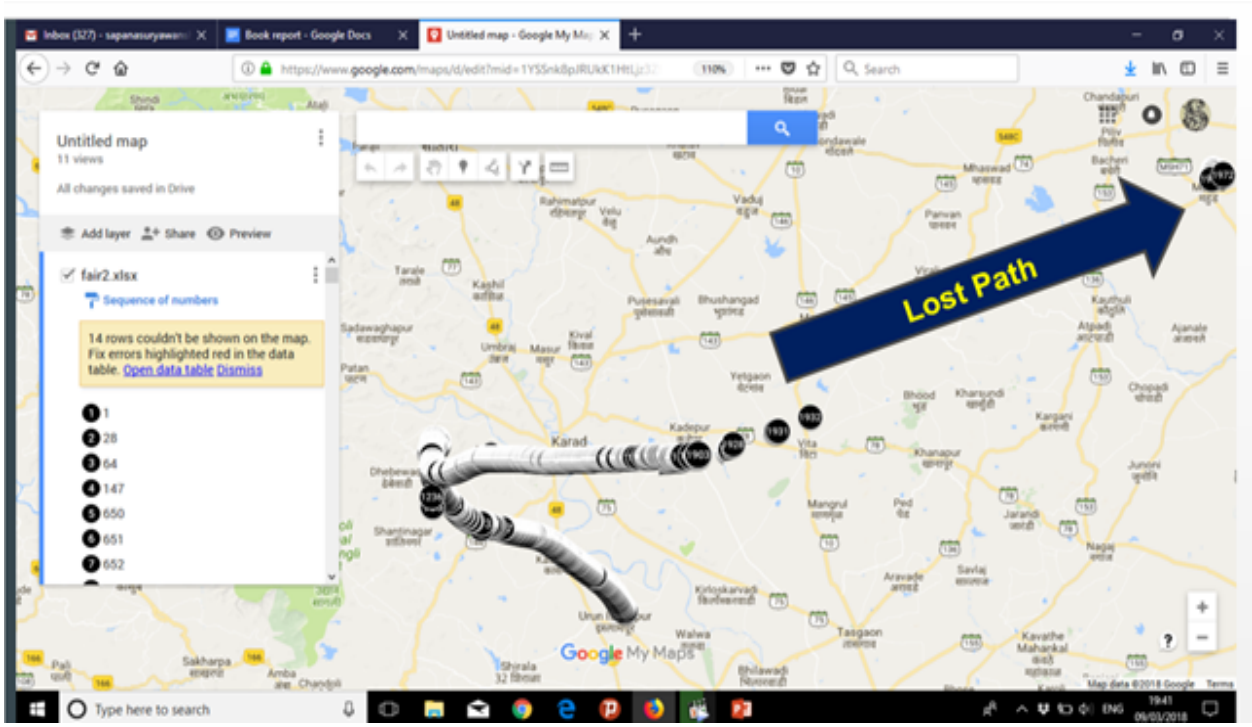

Fig: Lost Path due to Packet Loss

Payload:

1.Introduction :

The payload is an important subsystem in any satellite. The atmosphere surrounding Earth's surface consists of several layers, which are defined by physical properties mostly: temperature, wind speed, air density, and atmospheric pressure. The layers of the atmosphere are named, starting from Earth's surface, such as troposphere, stratosphere, mesosphere, thermosphere and exosphere. In our Balloon satellite,Our payload was intended towards collecting dust particles as well as bacterias.This objective was allotted to us by a well recognised institute IISER (Bhopal). The sample was meant to be collected for research purpose.

2. Abstract :

The payload was designed in accordance to the balloon satellite.The structure of the payload was kept quite compact and modular .The payload processed on the signals received through the the GPS modem and the Arduino Uno .The altitude for which the payload is desired to work provides technically harsh conditions and various engineering challenges .Though the payload (Also the balloonsat) sustained the conditions.

3. Requirements :

Basically, an air sampling payload requires cryogenic apparatus and highly expensive devices. We had the challenge to make the payload more feasible and dependable.

A cryogenic apparatus is a modern , widely used and reliable technique for air sampling.

The cryogenic apparatus requires mainly,

-Insulation from the environment.

-Sterilization.

-Highly chilled environment

The payload designed by us fulfilled all the desired requirements to some extent.

The reciprocating pump like mechanism was used in the operation of the payload. The sterilized inlet was exposed to environment and the outlet was let into a funnel apparatus which was designed like a trap for the dust particles. Two filter papers were used and were fixed to the wider end of the funnel. The initial filter paper was for trapping the dust particles and the later one was for letting the filtered air out of the funnel. The air which passed out through the second filter paper caused the chilling effect in the system.

The payload followed the mechanisms used in the cryogenic system to some extent .

- **4.Dispatch** : The delivery of the payload was made with utmost care. As per the indications assigned by IISER Bhopal the payload box was put in an insulated container and filled with ice bags. One day delivery was assured by the Courier service.

5.Function:

In the reciprocating pump operation of reciprocating motion is done by the power source (i.e. electric motor or i.c engine, etc). Power source gives rotary motion to crank; with the help of connecting rod we translate reciprocating motion to piston in the cylinder (i.e. intermediate link between connecting rod and piston). When crank moves from inner dead centre to outer dead centre vacuum will create in the cylinder. When piston moves outer dead centre to inner dead centre and piston force the medium at outlet or delivery value.The medium here was air at the altitude of

30Km.The condition was so programmed as to execute the working as the satellite reaches the desired height.The motor used in the pump was fixed with a motor driver circuit. The motor driver was further connected with an Arduino uno .

6.Pro's :

1. It was very feasible and economical.
2. It was very compact and lightweight
3. It was energy efficient
4. It was compact
5. It was strong and flexible enough to sustain jerk if satellite body breaks.

7.Con's :

1. Working of the mechanism wasn't assured
2. Little carelessness lead to contamination of samples.
3. Sterilisation wasn't guaranteed.

Power:

The power budget is calculation of total power requirements of various subsystems.

Sr. No.	Components	Voltage	Current	Power
1.	Raspberry Pi	5V	700mA	3500mW
2.	LoRa	3.3V	7mA	23.1mW
3.	Arduino Uno	5V	40mA	200mW
4.	GPS(NEO-6M)	3.3V	45mA	148.5mW
5.	Payload	9V	300mA	2700 mW

Main source of power for balloon satellite is chemical power i.e. rechargeable battery.Chemical power is suitable for small mission as our balloon satellite,which is designed for lifetime of few hours.

Motor driver circuit:

Arduino gives only 5V output which is not sufficient to drive the motor.So we have build the motor driver circuit which runs on the 9V voltage.This driver circuit is basically a relay driver circuit.Relay works on 5V which is provided by the regulator IC 7805.The regulator is used to convert the 9V of battery to 5V.

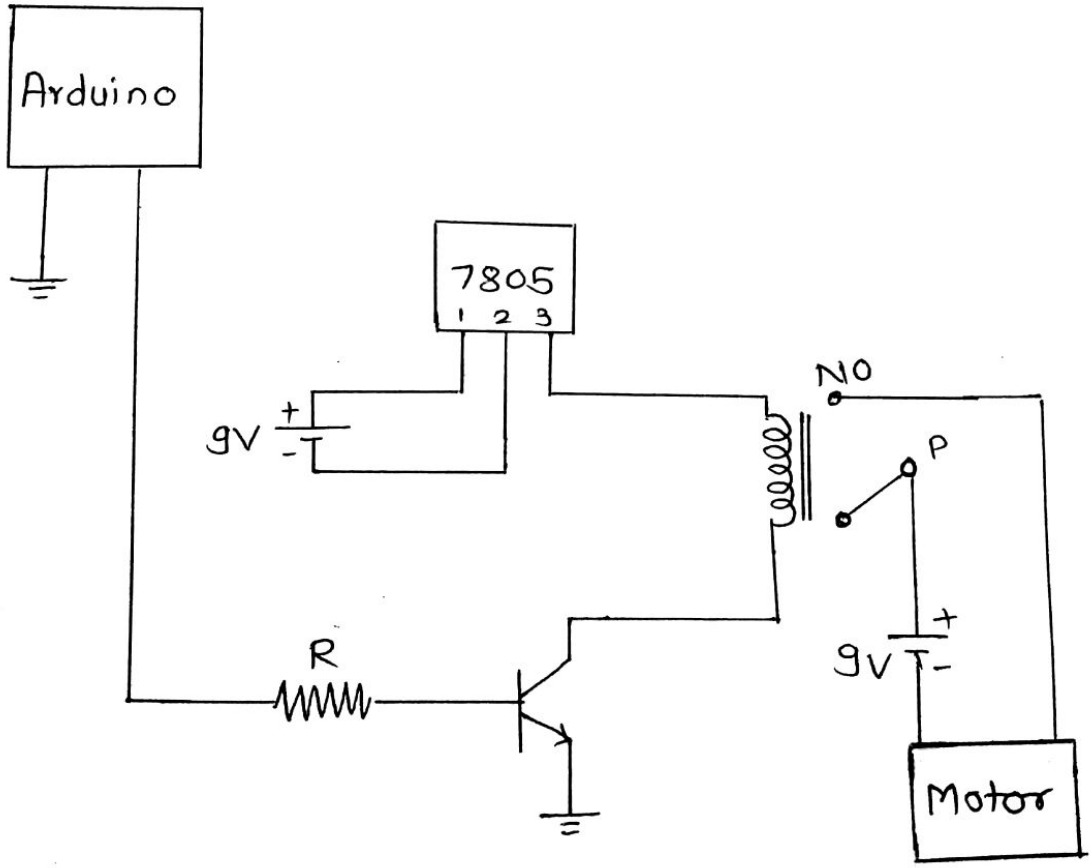

Power source :

The power source used in whole system is power bank of 10,000mhA which is connected to on board as well as LoRa module.

Another separate supply of 9 volt is given to the motor driver circuit because it works for very small time.

Using power bank instead of battery save more space, money and also reduce weight of system .

Structure -

Balloon:

Meteorological rubber latex balloon was used for our 1st High-Altitude Balloon experiment. The balloon was 1200gm of weight. Balloon was purchased from 'PAWAN Rubber Products'.

Payload Box:

The payload box used was of styrofoam with dimensions-30cmx25cmx30cm. Each box-side was 4.5cm thick. The styrofoam box was used so as to acquire thermal insulation (thermal conductivity-0.03W/mK) from the critical external conditions. The total weight of payload box was 1.5kg.

The box was divided into 3 compartments with corrugated sheets.

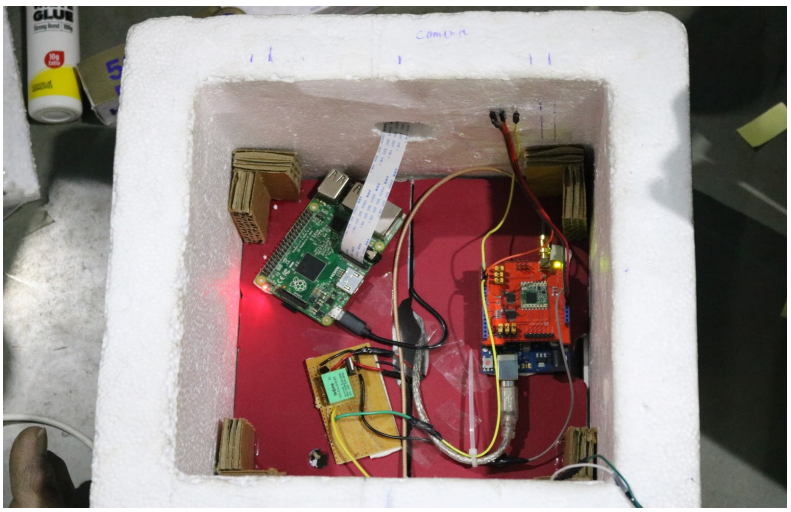

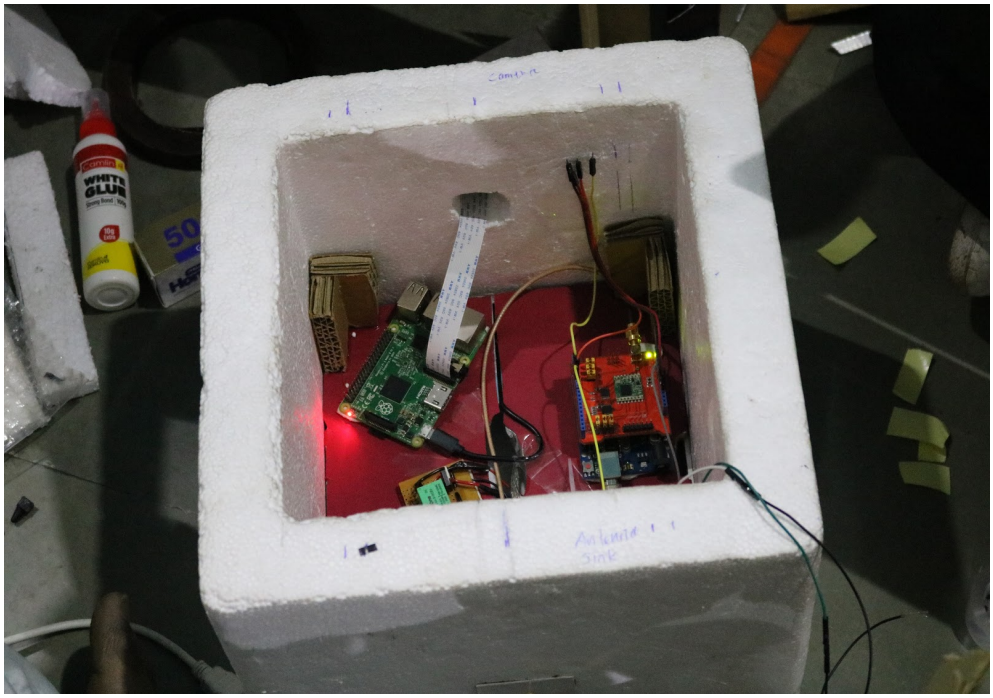

The upper compartment had Payload with OBC subsystem at the middle compartment and Power subsystem at the lower compartment. The Raspberry Pi camera and antenna from the LoRa module were on the sidewalls of the payload box.

Wind-vane structure was used to reduce the spinning motion of the payload during its flight, which was made using cardboard sheets. The

vanes were sticked with team members' mobile numbers so that payload recovery becomes easy.

Assembly of High Altitude Balloon satellite

Assembly is one of the crucial factor behind the success of whole project. So it was very important for assembly team to decide the methodology of assembly. Assembly consists of two important stages

1)filling the helium gas in the latex balloon and

2) linking the balloon, parachute and payload with each other by paracord rope.

- Filling the Helium gas in the latex balloon:

There were two gases to fill the balloon viz. hydrogen and helium. Instead of being too costly we used helium gas to fill the balloon because helium is noble gas and it needs less care in terms of handling. On the other hand hydrogen is explosive and catches fire when it comes in contact with oxygen. So helium is safer option for filling the balloon.

As per the calculations we required to fill about 3.67 cubic meters of helium to lift the 2 kg payload assembly with 100 gm positive lift. So we ordered 5 cubic meters of helium gas filled in the cylinder. Balloon is made up of latex, so it needed to handle it with care.while handling the balloon there are chances of leaving the stresses of oil on the balloon which leads to deterioration of balloon. So we used latex gloves to avoid stresses of oil on the balloon. Before filling the balloon,we needed to take care about leaking gas through the opening of balloon. So we inserted a piece of PVC pipe in the neck of balloon. Then we inserted hose pipe through that pipe and sealed the opening of balloon using zip ties. After filling the required amount of helium in the balloon, we gently pulled off the hose pipe from the balloon and sealed the opening of balloon using industrial grade tape.

- linking the balloon, parachute and payload with each other by paracord rope:

After filling the gas into balloon, balloon was attached to the PX-01 parachute by using paracord rope. Similarly other end of the parachute was attached to the payload box. Due air drag,the payload box was always in spinning motion, so we had taken special care while making the knots of rope. Each knot was wrapped with tape and zip ties were placed on them.

Also while linking the balloon and parachute, we kept large distance between them. They were about 2 meter apart from each other. Also parachute and payload were 3 meter apart from each other. This care were taken to reduce the impact generated by balloon after bursting at high altitude.

- Mistakes done by assembly team:

While filling the balloon with helium gas, because of the wrong calculations we filled less helium gas than actually required. Because of this, balloon was not able to lift the whole assembly with the accent speed we expected. Hence we removed the radar reflector (which was initially the part of our satellite assembly) to reduce the weight of whole assembly. This error occured in the calculations because structure team neglected the weight of rope which was about 300 gm.

References :

[1]https://www.mgsuperlabs.co.in/estore/Dragino-LoRa-Shield-support-433M-frequency?search=LoRa%20shield

[2] Journal of Microbiological Methods.

[3] Indian Journal of of Radio and Space Physics .Vol.25,February 1996 ,pp.1-7

[4] Report of High-Altitude Balloon Experiments at Indian Institute of Astrophysics https://arxiv.org/pdf/1506.01538v2.pdf