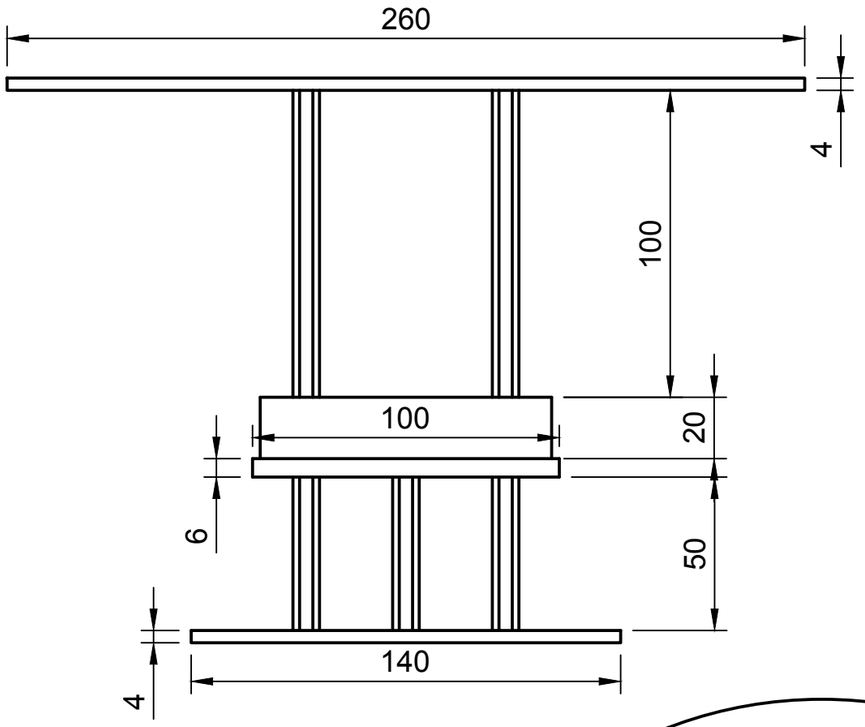

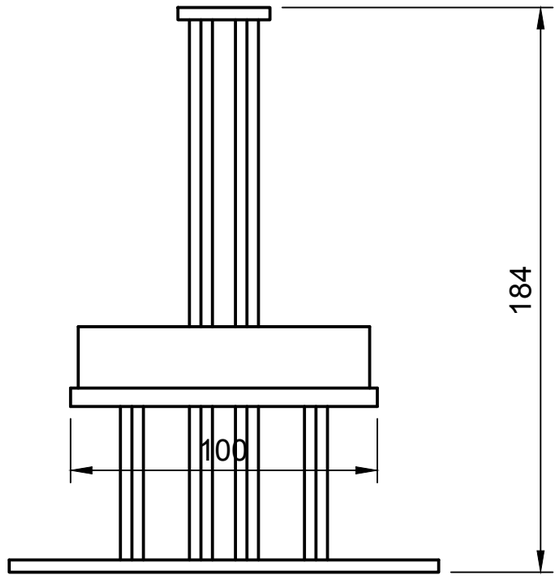

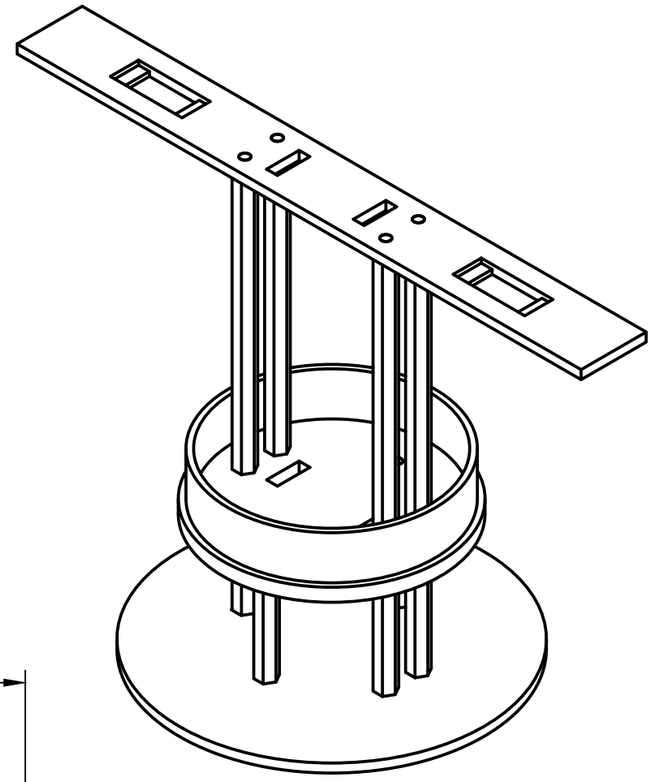

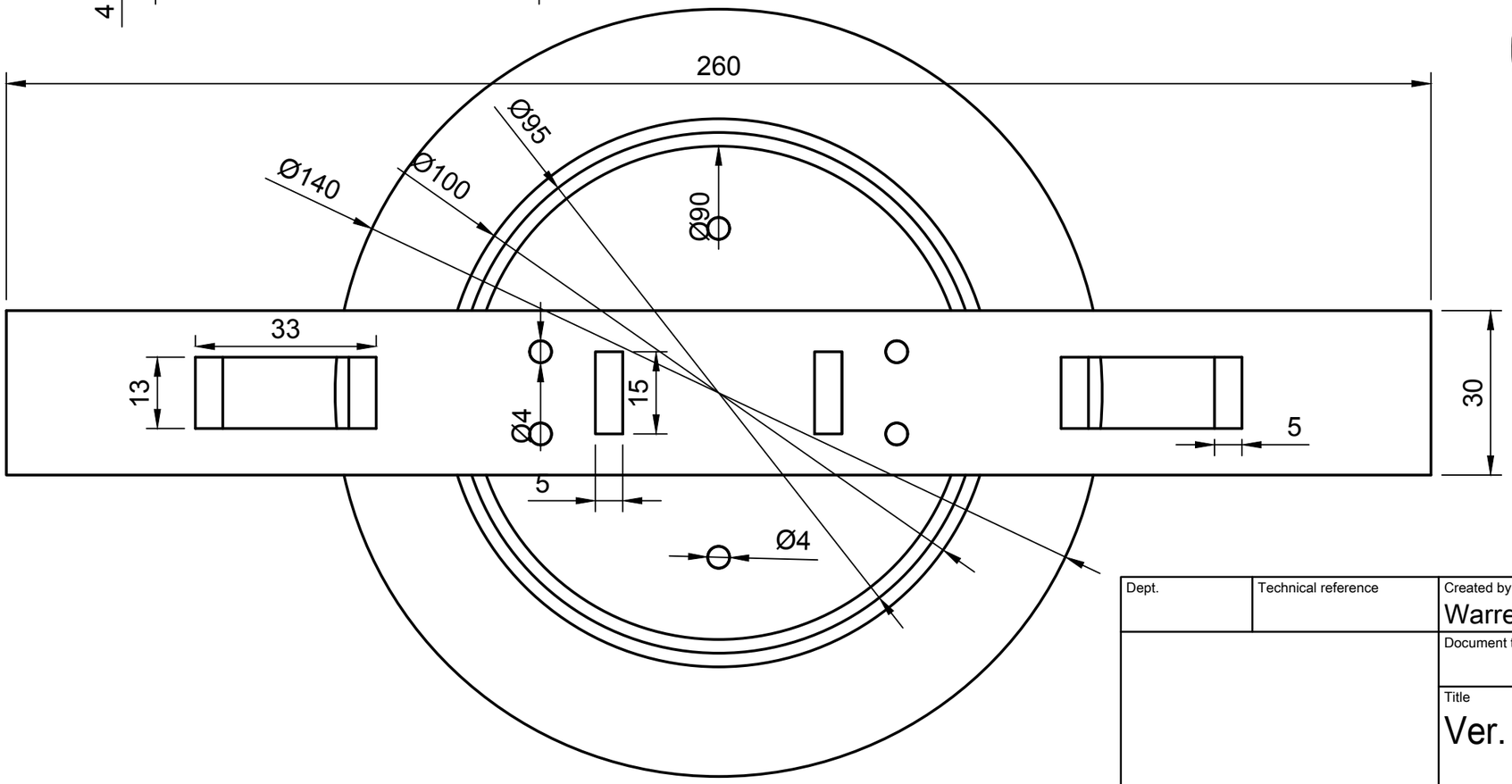

Dept.	Technical reference	Created by Warren Su 2/10/17	Approved by
		Document type	Document status
		Title Ver. 2 Assembly Test	DWG No.
			Rev. / Date of issue / Sheet 1/1