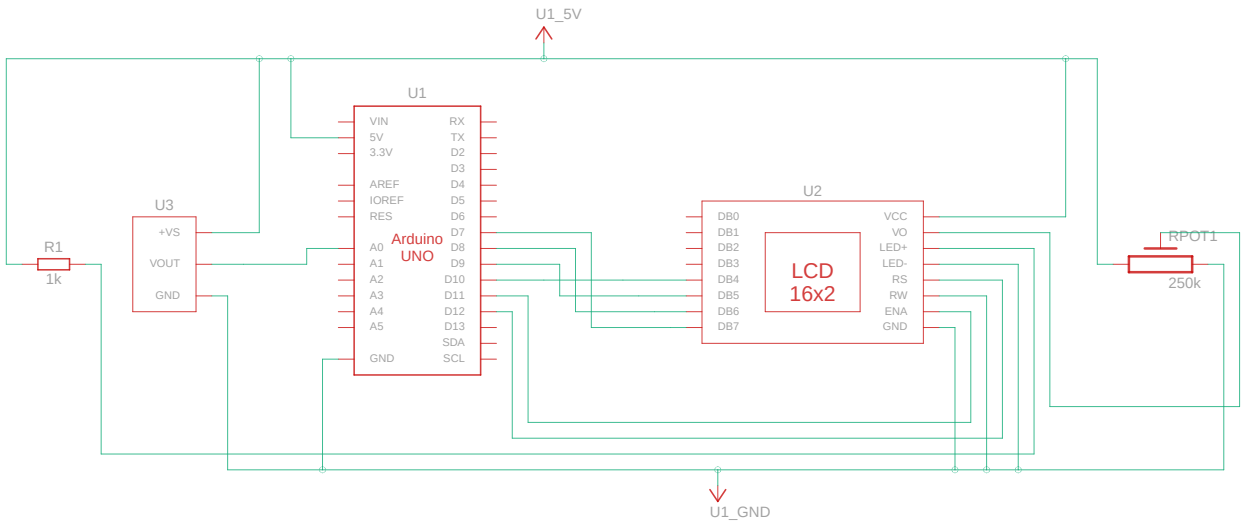

Made with Tinkercad®

Title: Digital Thermometer

Date: 6/25/2025, 8:48:53 PM

Sheet: 1/1