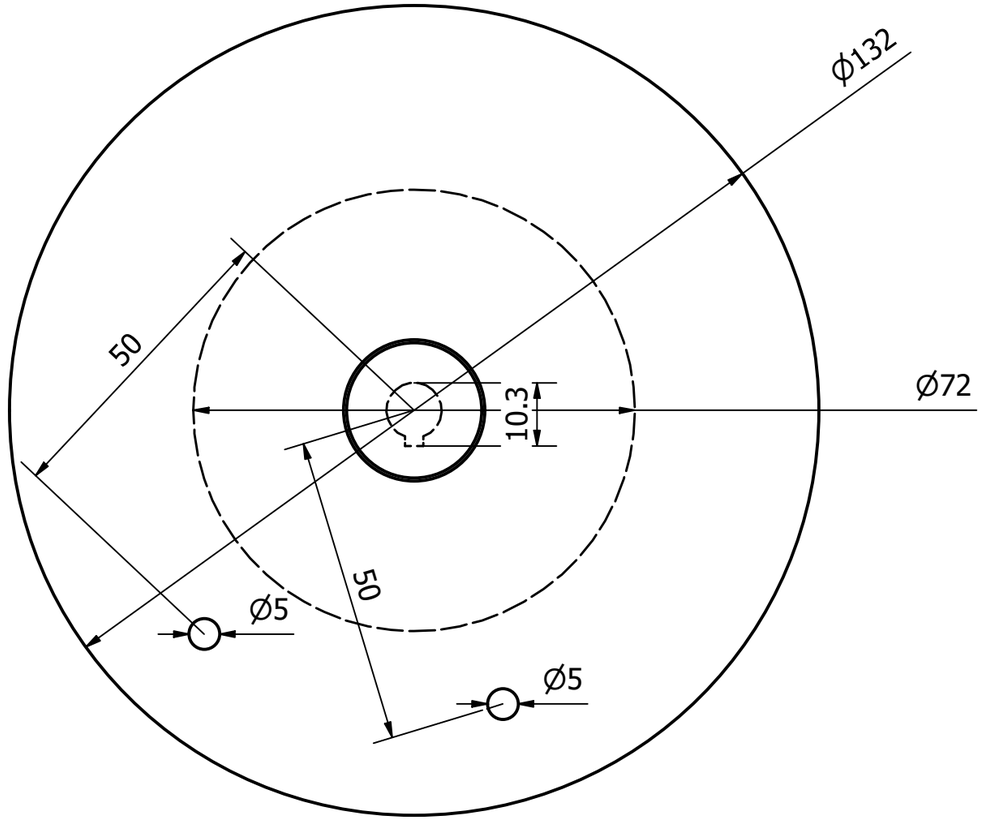

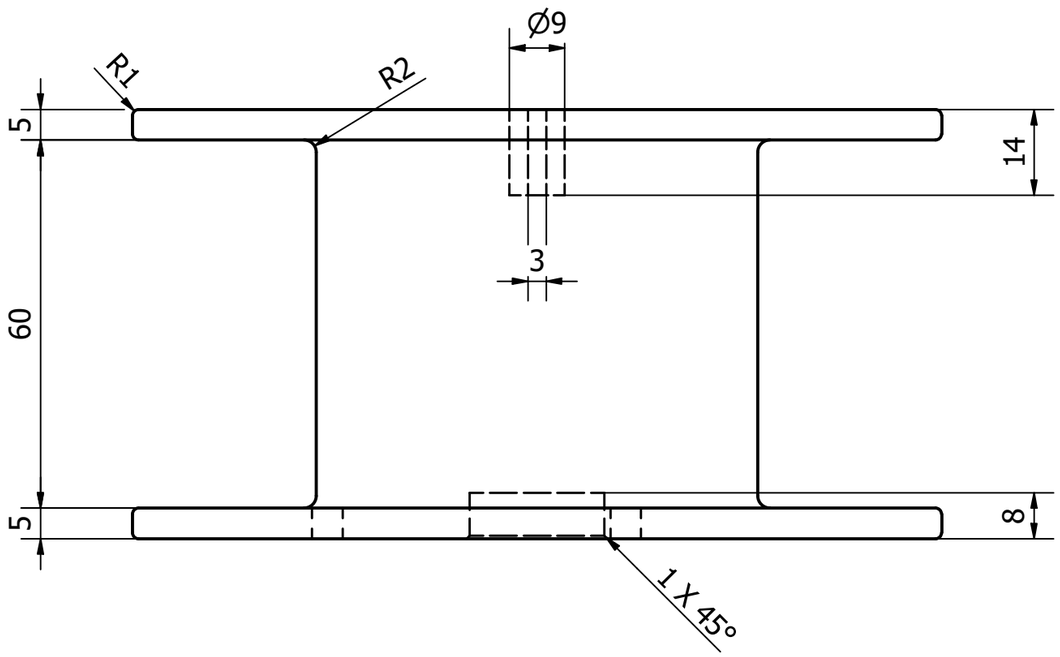

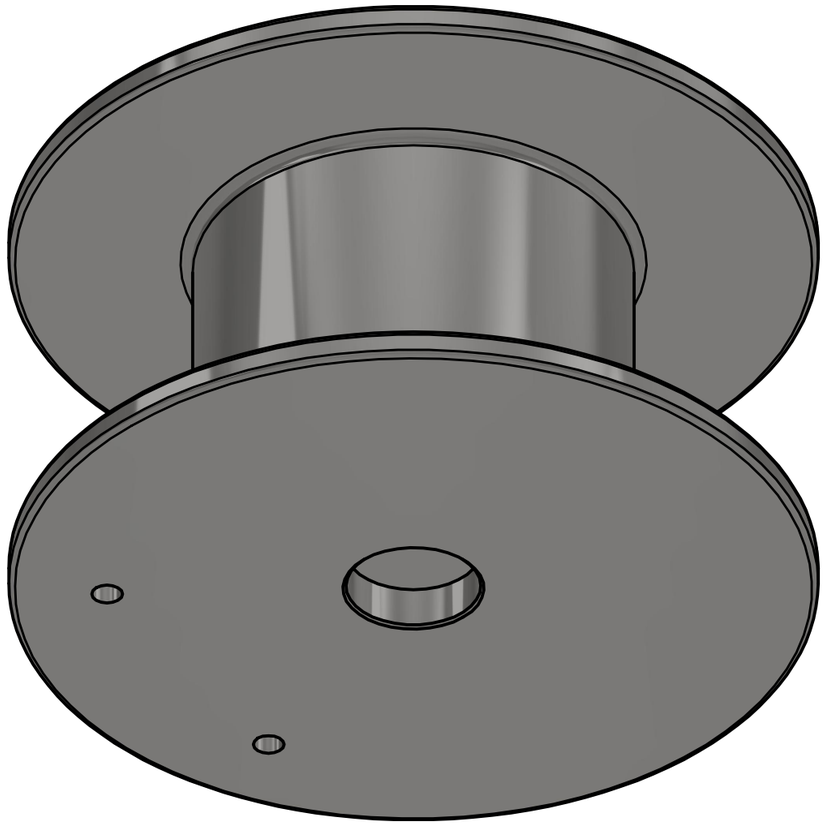

Designed by	Checked by	Approved by	Date	Date	
Brandon Lu				23/06/2021	

Flinders University	Main Cable Reel		
	reel	Edition	Sheet 1 / 1