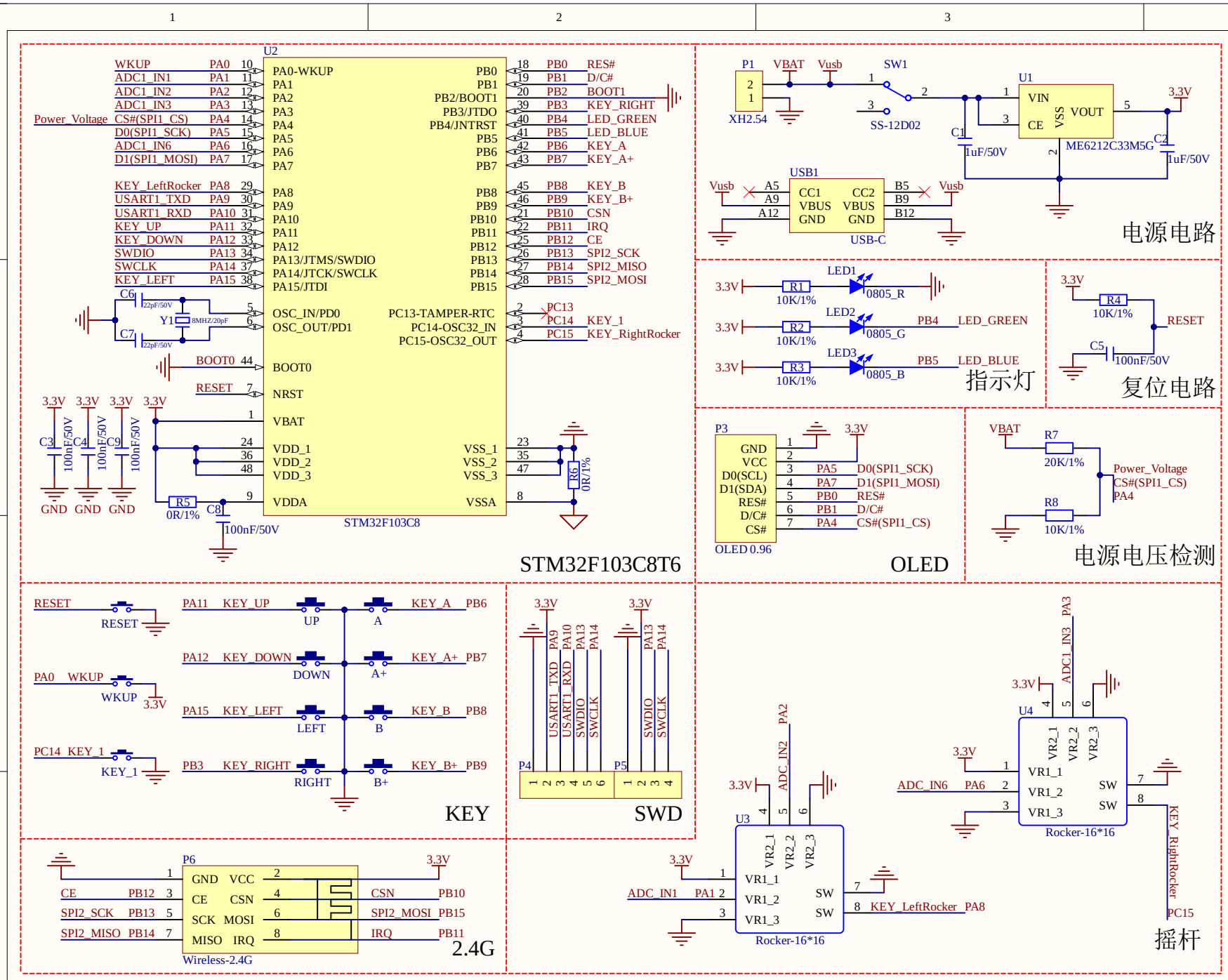
U2
STM32F103C8
STM32F103C8T6
WKUP PA0 10
ADC1_IN1 PA1 11
ADC1_IN2 PA2 12
ADC1_IN3 PA3 13
Power_Voltage CS#(SPI1_CS) PA4 14
D0(SPI1_SCK) PA5 15
ADC1_IN6 PA6 16
D1(SPI1_MOSI) PA7 17
KEY_LeftRocker PA8 29
USART1_TXD PA9 30
USART1_RXD PA10 31
KEY_UP PA11 32
KEY_DOWN PA12 33
SWDIO PA13 34
SWCLK PA14 37
KEY_LEFT PA15 38
PB0 18 RES#
PB1 19 D/C#
PB2 20 BOOT1
PB3 39 KEY_RIGHT
PB4 40 LED_GREEN
PB5 41 LED_BLUE
PB6 42 KEY_A
PB7 43 KEY_A+
PB8 45 KEY_B
PB9 46 KEY_B+
PB10 21 CSN
PB11 22 IRQ
PB12 25 CE
PB13 26 SPI2_SCK
PB14 27 SPI2_MISO
PB15 28 SPI2_MOSI
PC13 2
PC14 3 KEY_1
PC15 4 KEY_RightRocker
C6 22pF/50V
Y1 8MHZ/20pF
C7 22pF/50V
BOOT0 44
RESET 7
3.3V 3.3V 3.3V 3.3V
C3 100nF/50V
C4 100nF/50V
C9 100nF/50V
GND GND GND
R5 0R/1%
C8 100nF/50V
R6 0R/1%
P1 VBAT Vusb
XH2.54
SW1
SS-12D02
C1 1uF/50V
U1
VIN VOUT CE VSS
ME6212C33M5G
C2 1uF/50V
USB1
Vusb A5 A9 A12
CC1 VBUS GND
CC2 VBUS GND
B5 B9 B12
USB-C
电源电路
LED1 R1 10K/1% 0805_R
LED2 R2 10K/1% 0805_G PB4 LED_GREEN
LED3 R3 10K/1% 0805_B PB5 LED_BLUE
指示灯
R4 10K/1%
RESET
C5 100nF/50V
复位电路
P3
GND VCC D0(SCL) D1(SDA) RES# D/C# CS#
D0(SPI1_SCK) D1(SPI1_MOSI) RES# D/C# CS#(SPI1_CS)
OLED 0.96
OLED
R7 20K/1%
R8 10K/1%
Power_Voltage
CS#(SPI1_CS)
PA4
电源电压检测
RESET
PA0 WKUP
PC14 KEY_1
PA11 KEY_UP UP
PA12 KEY_DOWN DOWN
PA15 KEY_LEFT LEFT
PB3 KEY_RIGHT RIGHT
KEY_A PB6 A
KEY_A+ PB7 A+
KEY_B PB8 B
KEY_B+ PB9 B+
KEY
P4 P5
USART1_TXD PA9
USART1_RXD PA10
SWDIO PA13
SWCLK PA14
SWDIO PA13
SWCLK PA14
SWD
P6
GND VCC CE CSN SCK MOSI MISO IRQ
CE PB12
SPI2_SCK PB13
SPI2_MISO PB14
CSN PB10
SPI2_MOSI PB15
IRQ PB11
Wireless-2.4G
2.4G
U3
ADC_IN1 PA1
ADC_IN2 PA2
VR2_1 VR2_2 VR2_3
VR1_1 VR1_2 VR1_3
SW SW
KEY_LeftRocker PA8
Rocker-16*16
U4
ADC_IN3 PA3
ADC_IN6 PA6
KEY_RightRocker PC15
Rocker-16*16
摇杆