PART NUMBER	DESCRIPTION	QTY.
R002	SSS56104 500kV Motor	1
R003	Neugart PLE40 i=8	1
R102	motor_gear_adapter_A	1
R103	motor_gear_adapter_B	1
R005	FHCS M4 X 0.7 X 8MM 18-8	10
R004	BHCS M4X0.7X6MM 18-8	16
R101	motor_tube	1
R104	front_cap	1
R106	shaft_cap	1
R013	Oil seal bushing	2
R014	Bearing 8MM ID 11MM OD	1
R012	8MM to 10MM Shaft Coupler	1
R105	gear_mount	1
R108	nose_cone_B	1
R107	nose_cone_A	1
R011	8mm Shaft L= 65mm	1
R006	2.25 OD 2.0ID, 1/8in Dash 226 Buna-N	3
5909K11	Thrust Bearing	1
5909K71	Thrust Bearing Washer	2
R109	Thrust Bearing Mount	1
Propeller6_2_14kn4B	4 Blade Prop2750 RPM, 14 knots	1
R110	Reverse Stop Bushing	1

REVISION HISTORY			
REV.	DESCRIPTION	DATE	ENGINEER
1	INITIAL RELEASE	09 AUG 2017	RE
2	ADDED THRUST BEARING	10/11 SEPT 20176/2017	RE

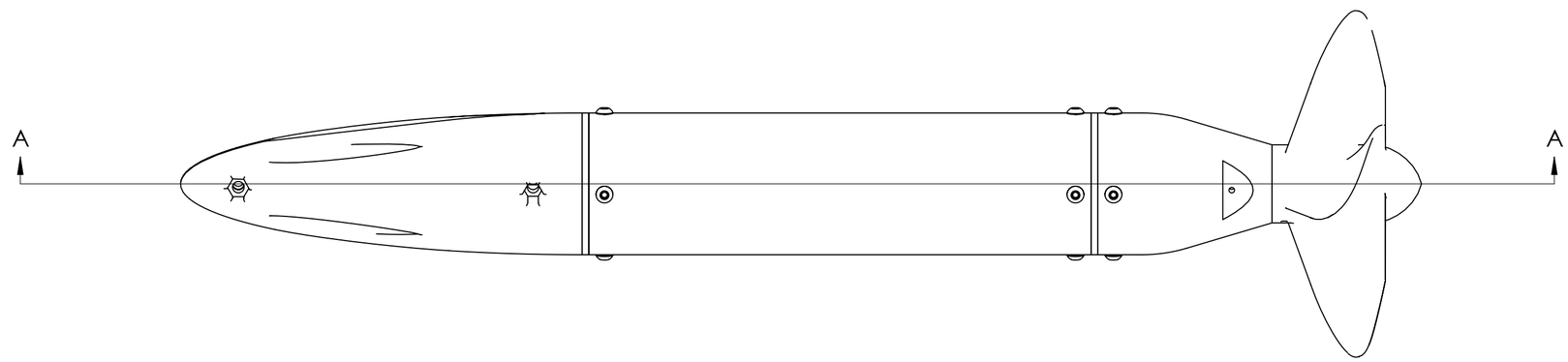

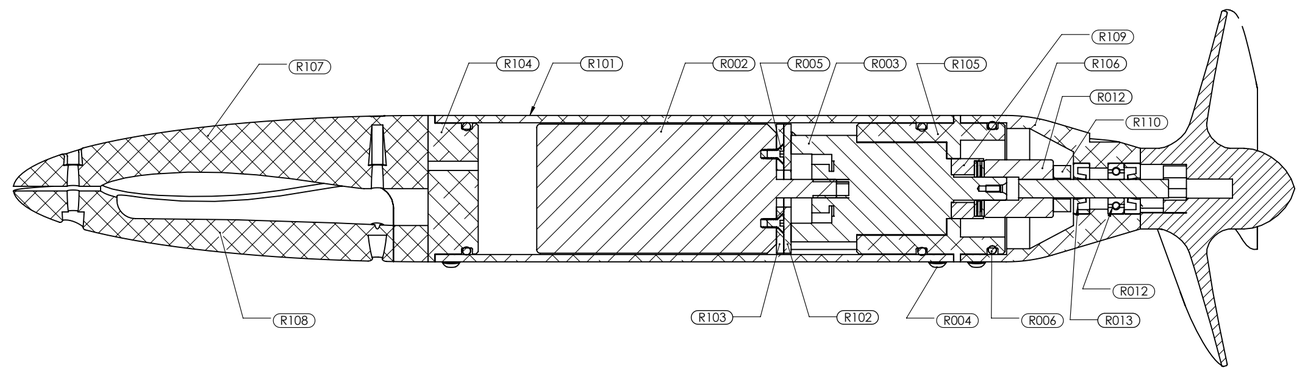

SECTION A-A

ROBBIESBOATS.COM

PROPRIETARY AND CONFIDENTIAL

UNLESS OTHERWISE SPECIFIED

DIMENSIONS ARE IN MILLIMETERS & GRAMS

INTERPRET DIMENSIONS & TOLERANCES PER ASME Y14.5M-2009

THIRD ANGLE PROJECTION

		DATE
DESIGNED	R. Edwards	09 AUG 2017
DRAWN		
CHECKED		
APPROVED		
APPROVED		

APPROXIMATE MASS: (1719.77)

SIZE C | DO NOT SCALE | SCALE 1:2

ITEM DESCRIPTION

KITEFOIL THRUSTER ASSY

SHEET 1 OF 1

ITEM NUMBER **R001**

REV. **2**