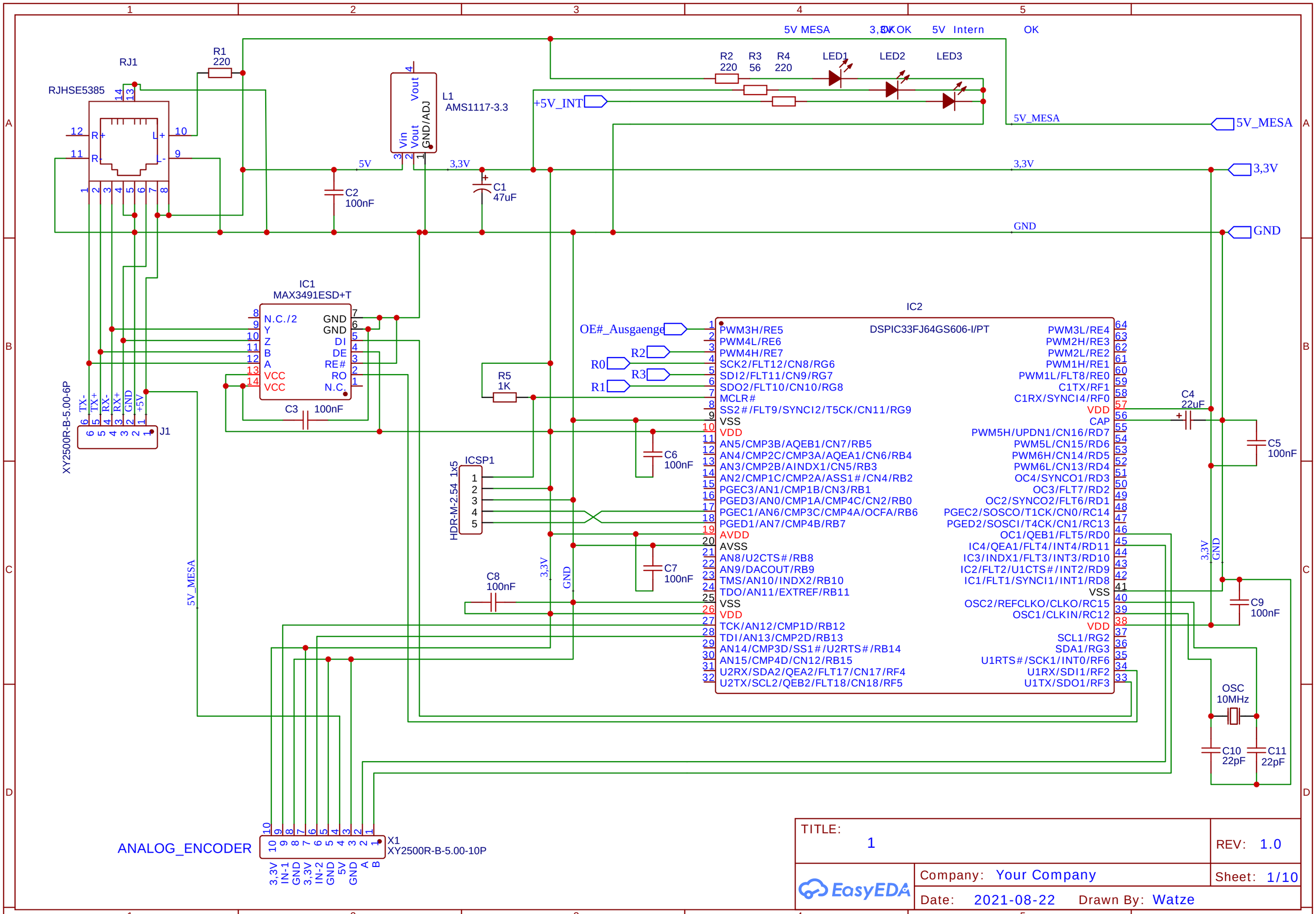
5V MESA
3,3V OK
5V Intern
OK
RJ1
RJHSE5385
R1
220
R2
220
R3
56
R4
220
LED1
LED2
LED3
L1
AMS1117-3.3
Vout
Vin
GND/ADJ
+5V_INT
5V
3,3V
C2
100nF
C1
47uF
5V_MESA
3,3V
GND
IC1
MAX3491ESD+T
N.C./2
Y
Z
B
A
VCC
VCC
GND
GND
DI
DE
RE#
RO
N.C.
C3
100nF
XY2500R-B-5.00-6P
TX-
TX+
RX-
RX+
GND
+5V
J1
R5
1K
ICSP1
HDR-M-2.54_1x5
C6
100nF
C7
100nF
C8
100nF
OE#_Ausgaenge
R0
R1
R2
R3
IC2
DSPIC33FJ64GS606-I/PT
PWM3H/RE5
PWM4L/RE6
PWM4H/RE7
SCK2/FLT12/CN8/RG6
SDI2/FLT11/CN9/RG7
SDO2/FLT10/CN10/RG8
MCLR#
SS2#/FLT9/SYNCI2/T5CK/CN11/RG9
VSS
VDD
AN5/CMP3B/AQEB1/CN7/RB5
AN4/CMP2C/CMP3A/AQEA1/CN6/RB4
AN3/CMP2B/AINDX1/CN5/RB3
AN2/CMP1C/CMP2A/ASS1#/CN4/RB2
PGEC3/AN1/CMP1B/CN3/RB1
PGED3/AN0/CMP1A/CMP4C/CN2/RB0
PGEC1/AN6/CMP3C/CMP4A/OCFA/RB6
PGED1/AN7/CMP4B/RB7
AVDD
AVSS
AN8/U2CTS#/RB8
AN9/DACOUT/RB9
TMS/AN10/INDX2/RB10
TDO/AN11/EXTREF/RB11
VSS
VDD
TCK/AN12/CMP1D/RB12
TDI/AN13/CMP2D/RB13
AN14/CMP3D/SS1#/U2RTS#/RB14
AN15/CMP4D/CN12/RB15
U2RX/SDA2/QEA2/FLT17/CN17/RF4
U2TX/SCL2/QEB2/FLT18/CN18/RF5
PWM3L/RE4
PWM2H/RE3
PWM2L/RE2
PWM1H/RE1
PWM1L/FLT8/RE0
C1TX/RF1
C1RX/SYNCI4/RF0
VDD
CAP
PWM5H/UPDN1/CN16/RD7
PWM5L/CN15/RD6
PWM6H/CN14/RD5
PWM6L/CN13/RD4
OC4/SYNCO1/RD3
OC3/FLT7/RD2
OC2/SYNCO2/FLT6/RD1
PGEC2/SOSCO/T1CK/CN0/RC14
PGED2/SOSCI/T4CK/CN1/RC13
OC1/QEB1/FLT5/RD0
IC4/QEA1/FLT4/INT4/RD11
IC3/INDX1/FLT3/INT3/RD10
IC2/FLT2/U1CTS#/INT2/RD9
IC1/FLT1/SYNCI1/INT1/RD8
VSS
OSC2/REFCLKO/CLKO/RC15
OSC1/CLKIN/RC12
VDD
SCL1/RG2
SDA1/RG3
U1RTS#/SCK1/INT0/RF6
U1RX/SDI1/RF2
U1TX/SDO1/RF3
C4
22uF
C5
100nF
C9
100nF
OSC
10MHz
C10
22pF
C11
22pF
ANALOG_ENCODER
X1
XY2500R-B-5.00-10P
3,3V
IN-1
GND
3,3V
IN-2
GND
5V
GND
A
B
TITLE:
1
REV: 1.0
Company: Your Company
Sheet: 1/10
Date: 2021-08-22
Drawn By: Watze
EasyEDA

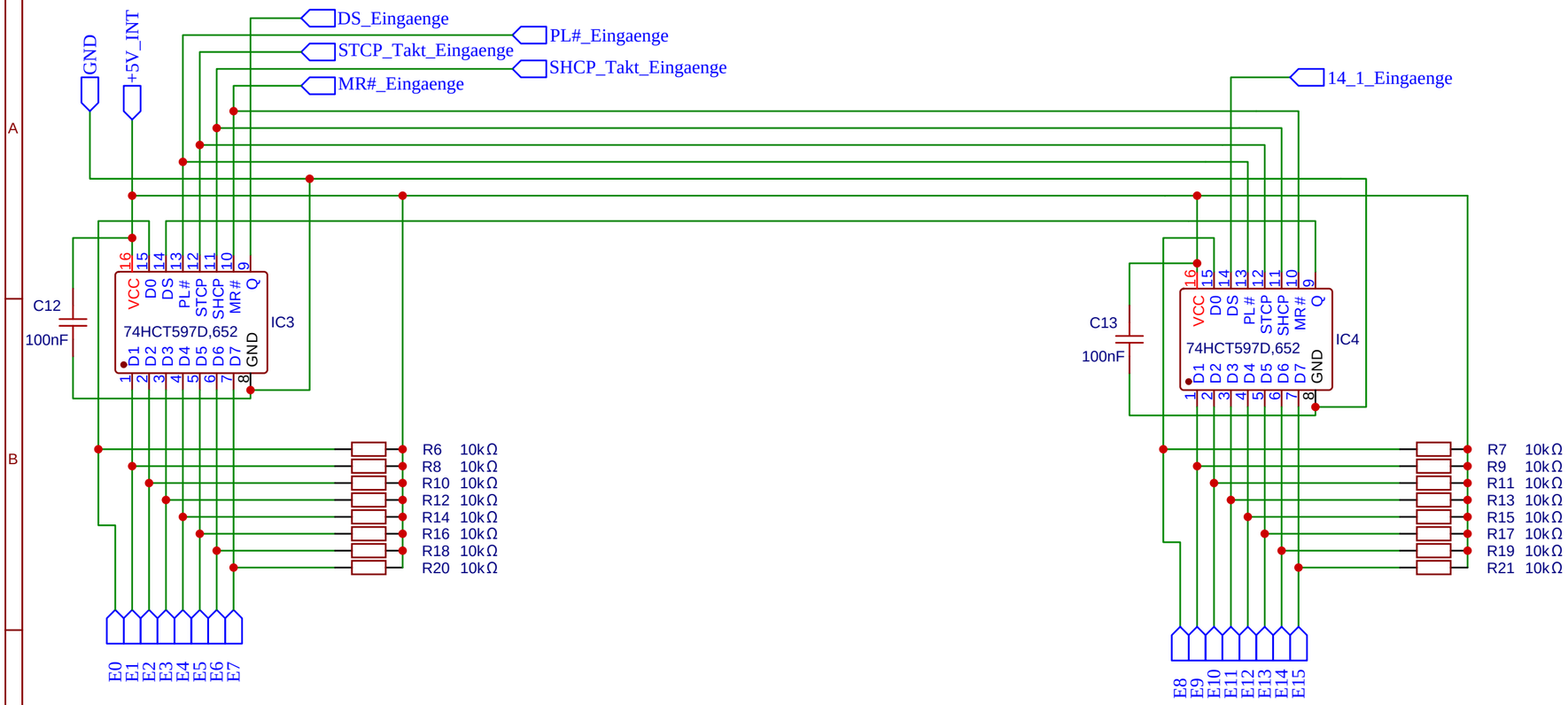

TITLE: 3		REV: 1.0
EasyEDA	Company: Your Company	Sheet: 3/10
	Date: 2021-09-04 Drawn By: Watze	

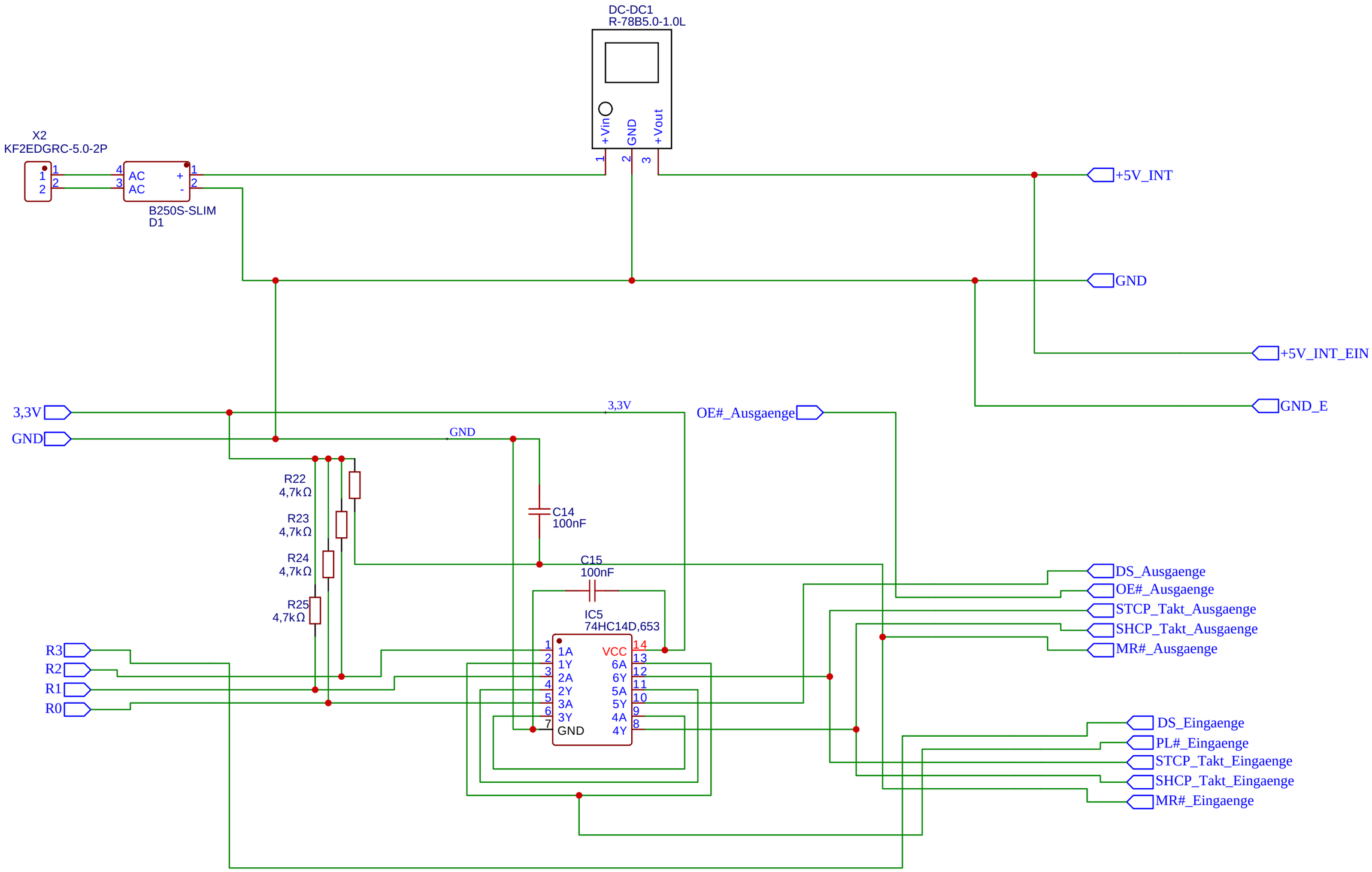

TITLE: 2		REV: 1.0
EasyEDA	Company: Your Company	Sheet: 2/10
	Date: 2021-09-11 Drawn By: Watze	

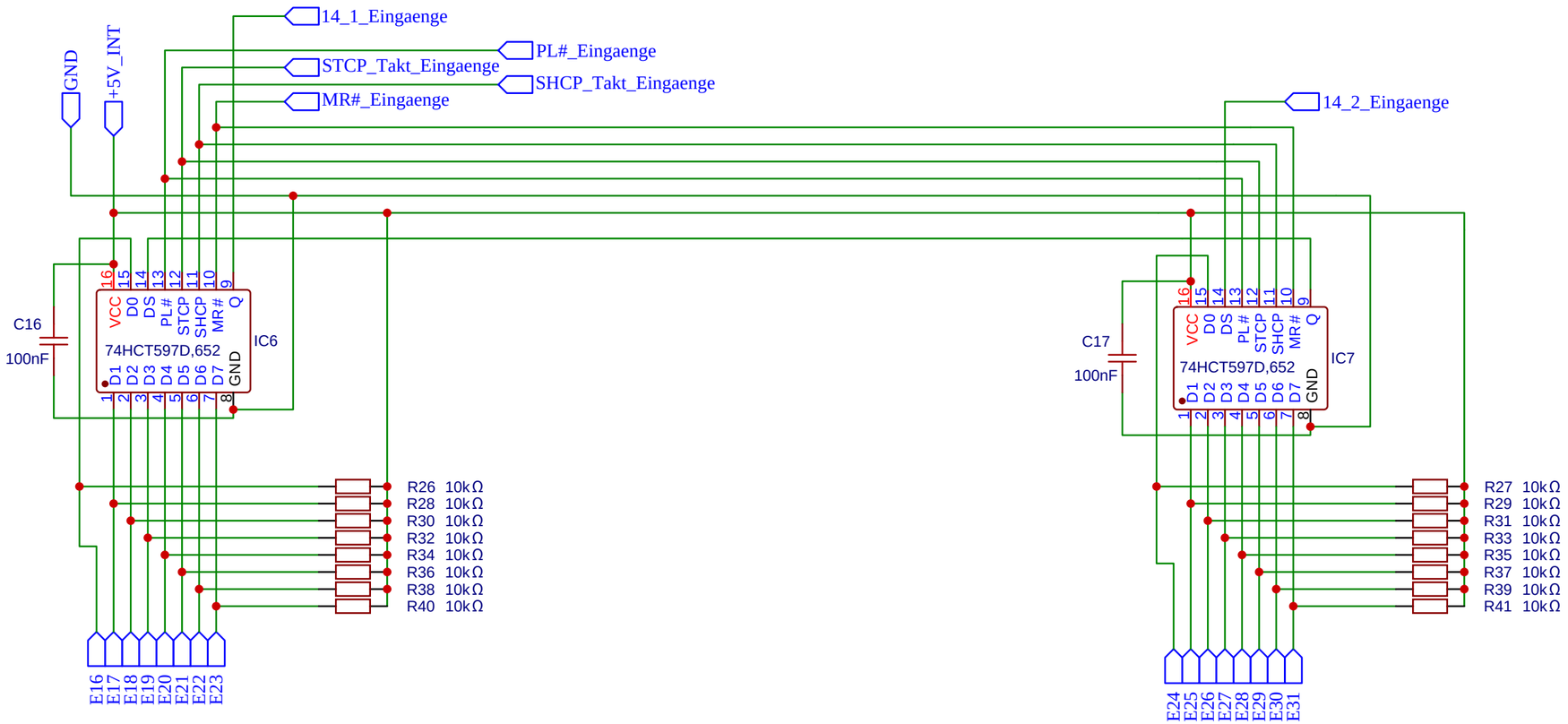

TITLE: 3		REV: 1.0
EasyEDA	Company: Your Company	Sheet: 4/10
	Date: 2021-09-04 Drawn By: Watze	

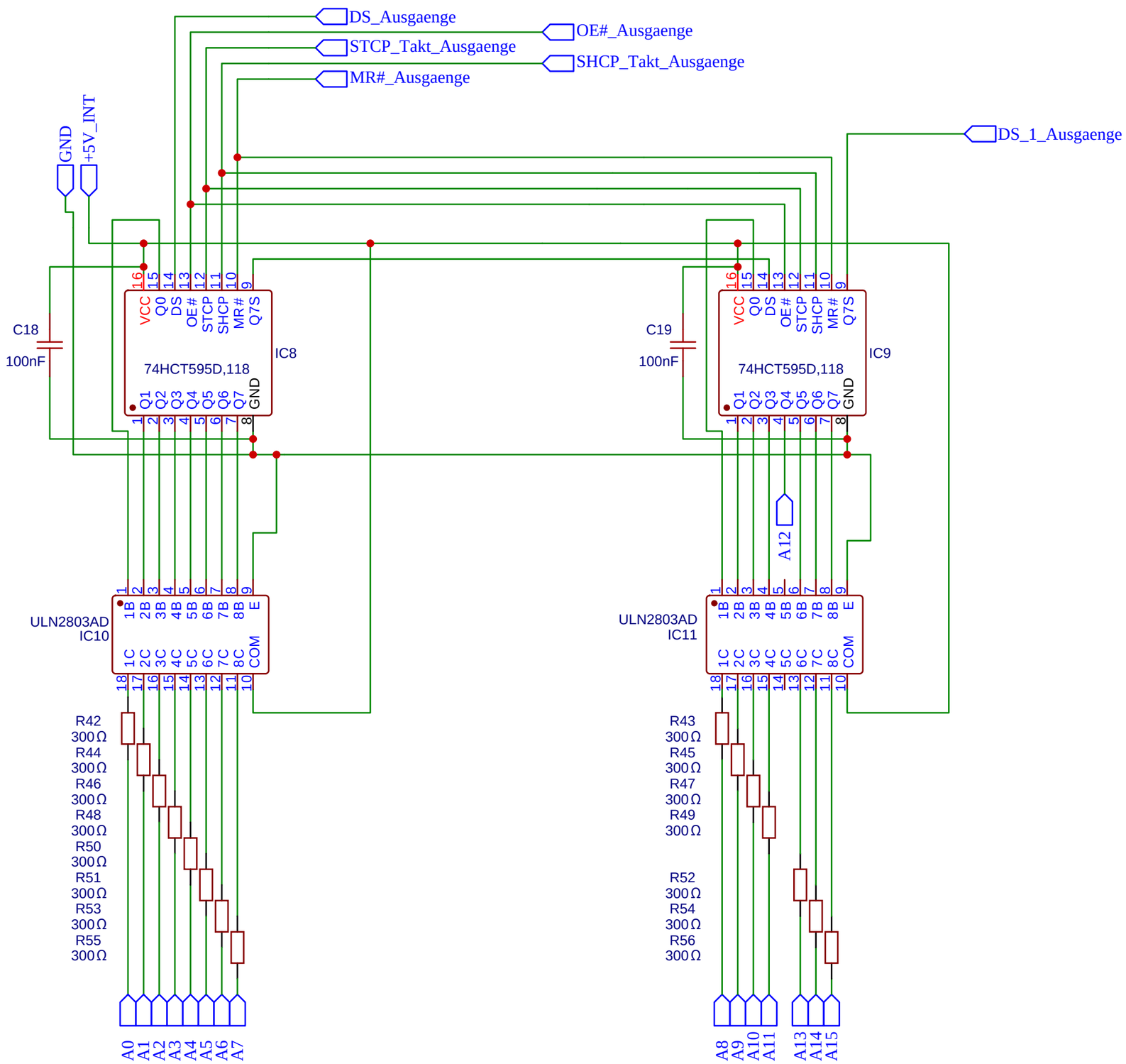

TITLE: 4		REV: 1.0
EasyEDA	Company: Your Company	Sheet: 7/10
	Date: 2021-09-04 Drawn By: Watze	

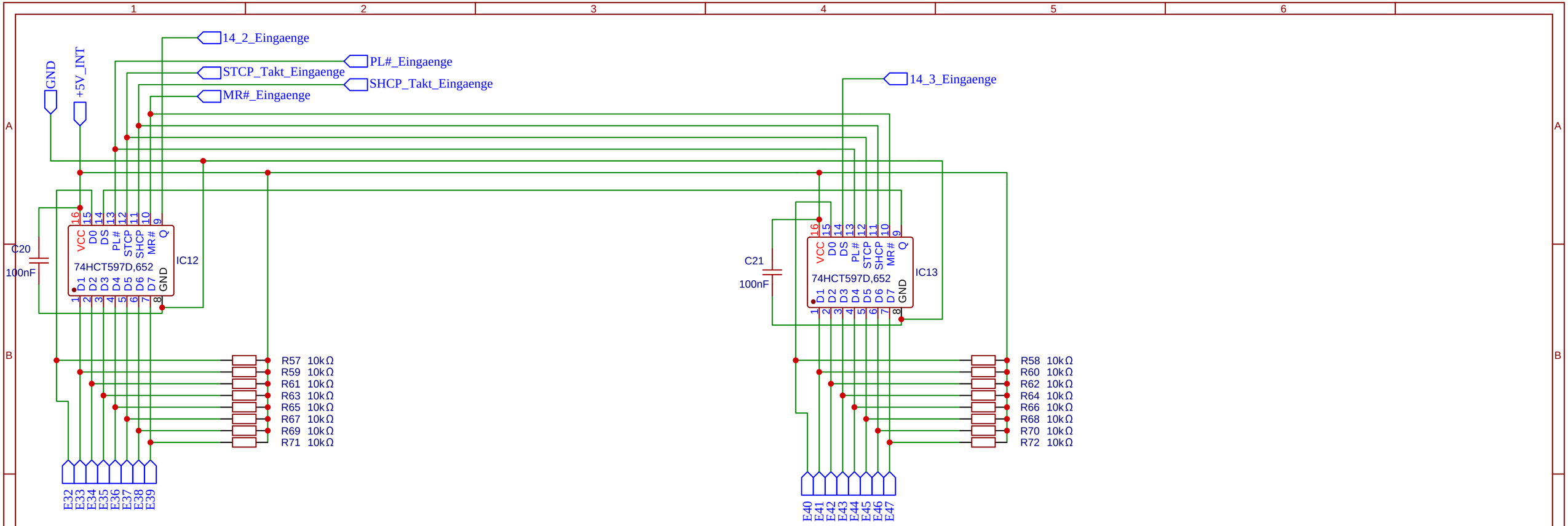

TITLE: 3		REV: 1.0
EasyEDA	Company: Your Company	Sheet: 5/10
	Date: 2021-09-04 Drawn By: Watze	

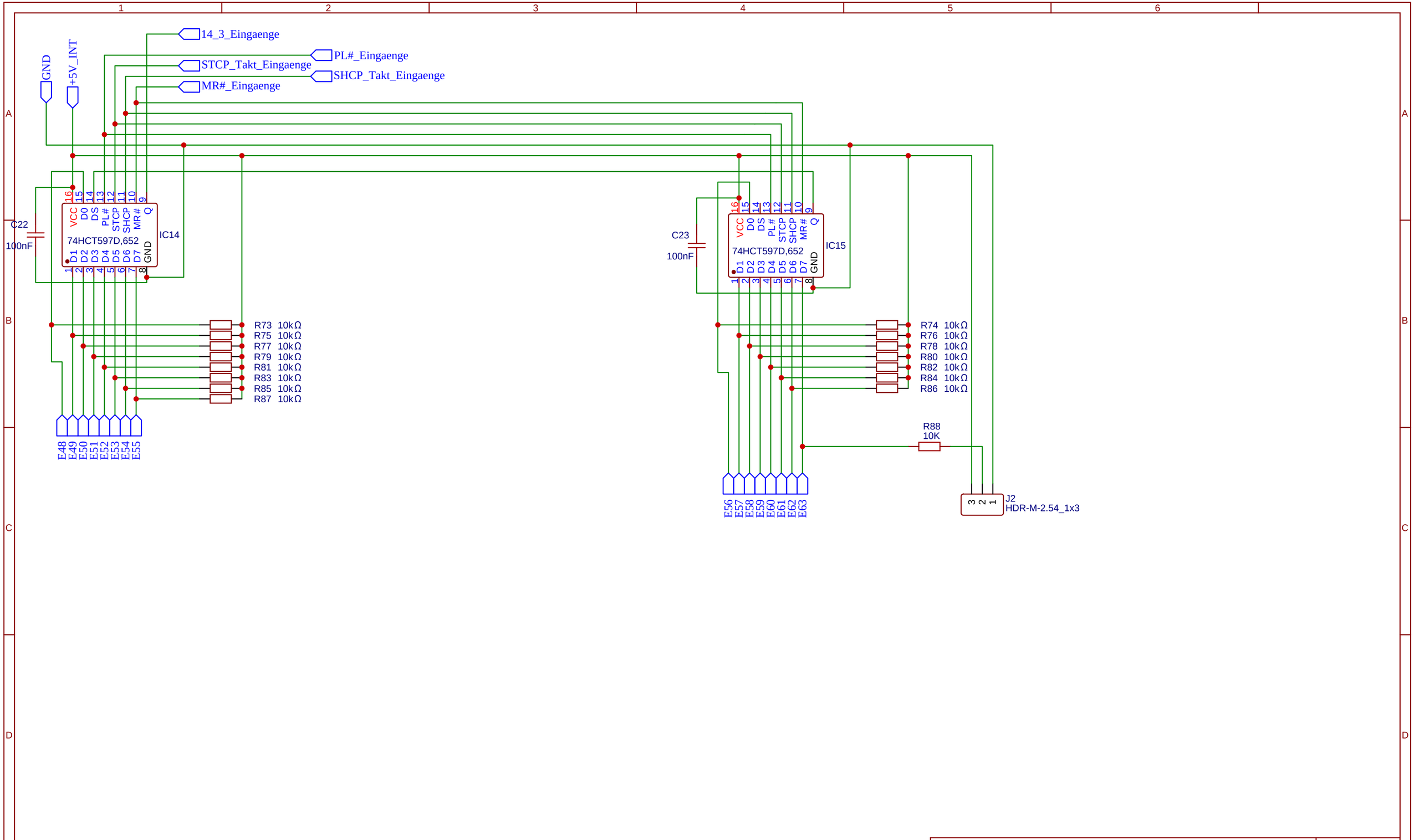

TITLE: 3		REV: 1.0
EasyEDA	Company: Your Company	Sheet: 6/10
	Date: 2021-09-04 Drawn By: Watze	

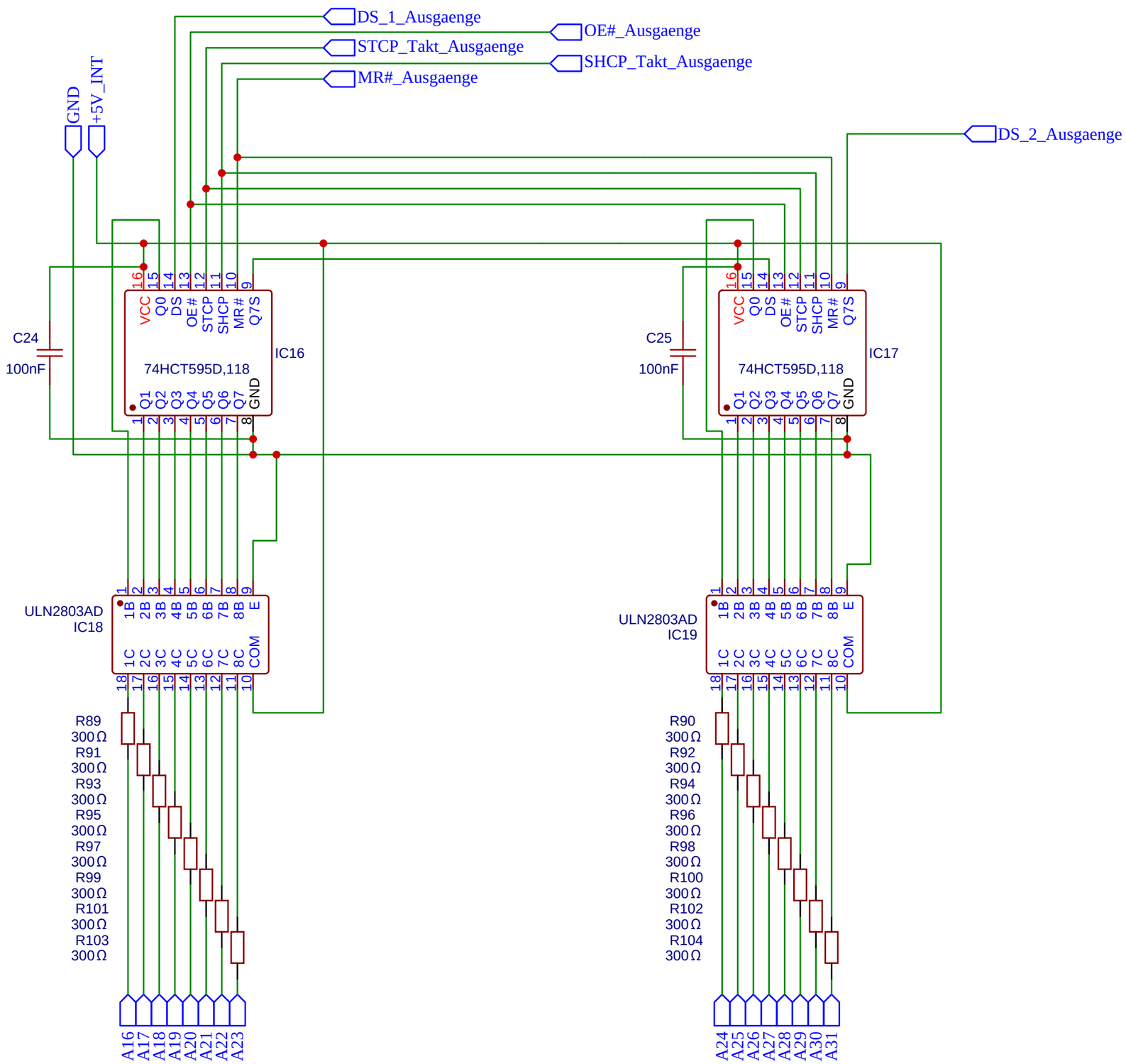

TITLE: 4	REV: 1.0
Company: Your Company	Sheet: 8/10
Date: 2021-09-04 Drawn By: Watze	

EasyEDA

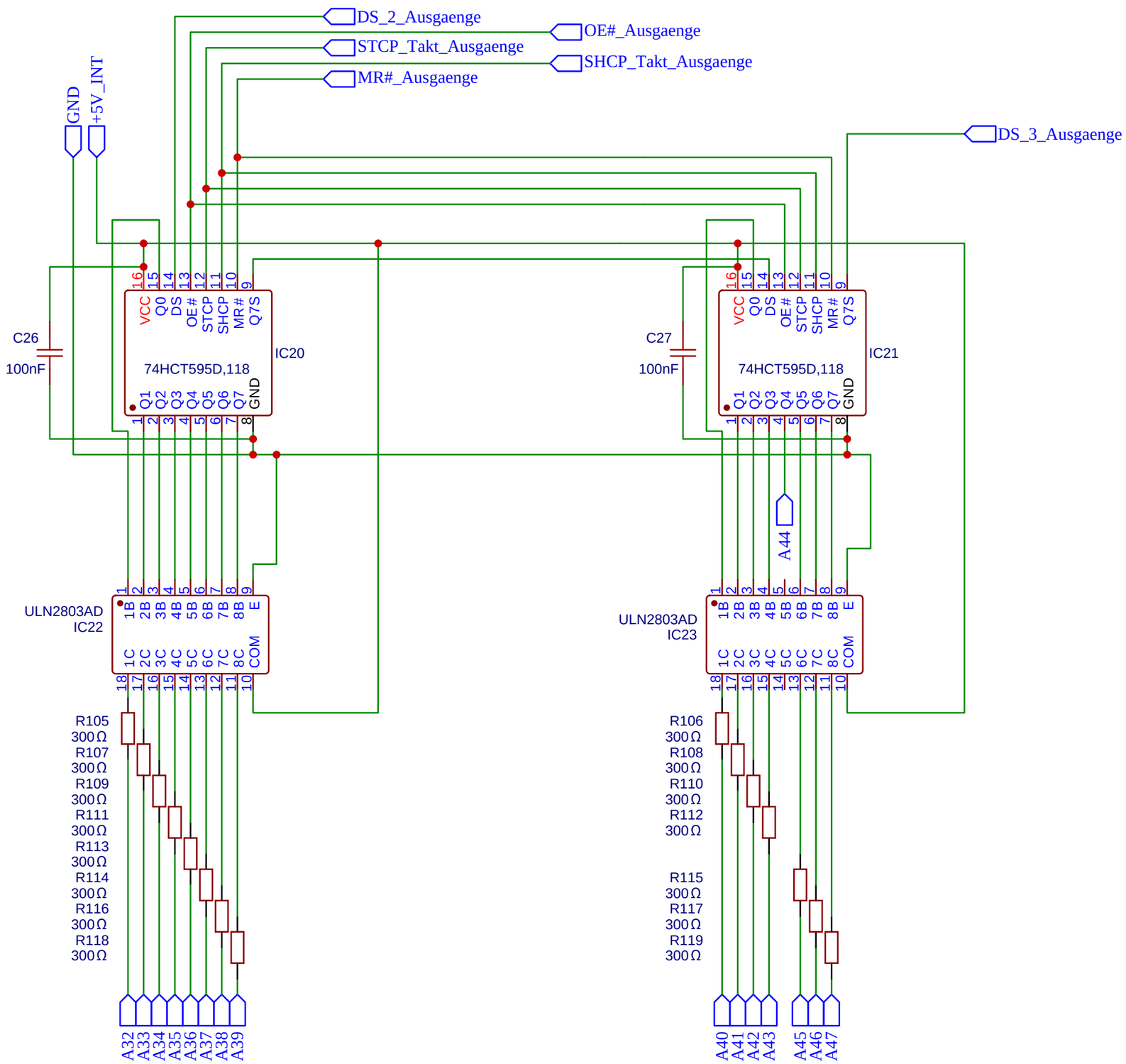

TITLE: 4		REV: 1.0
EasyEDA	Company: Your Company	Sheet: 9/10
	Date: 2021-09-04 Drawn By: Watze	

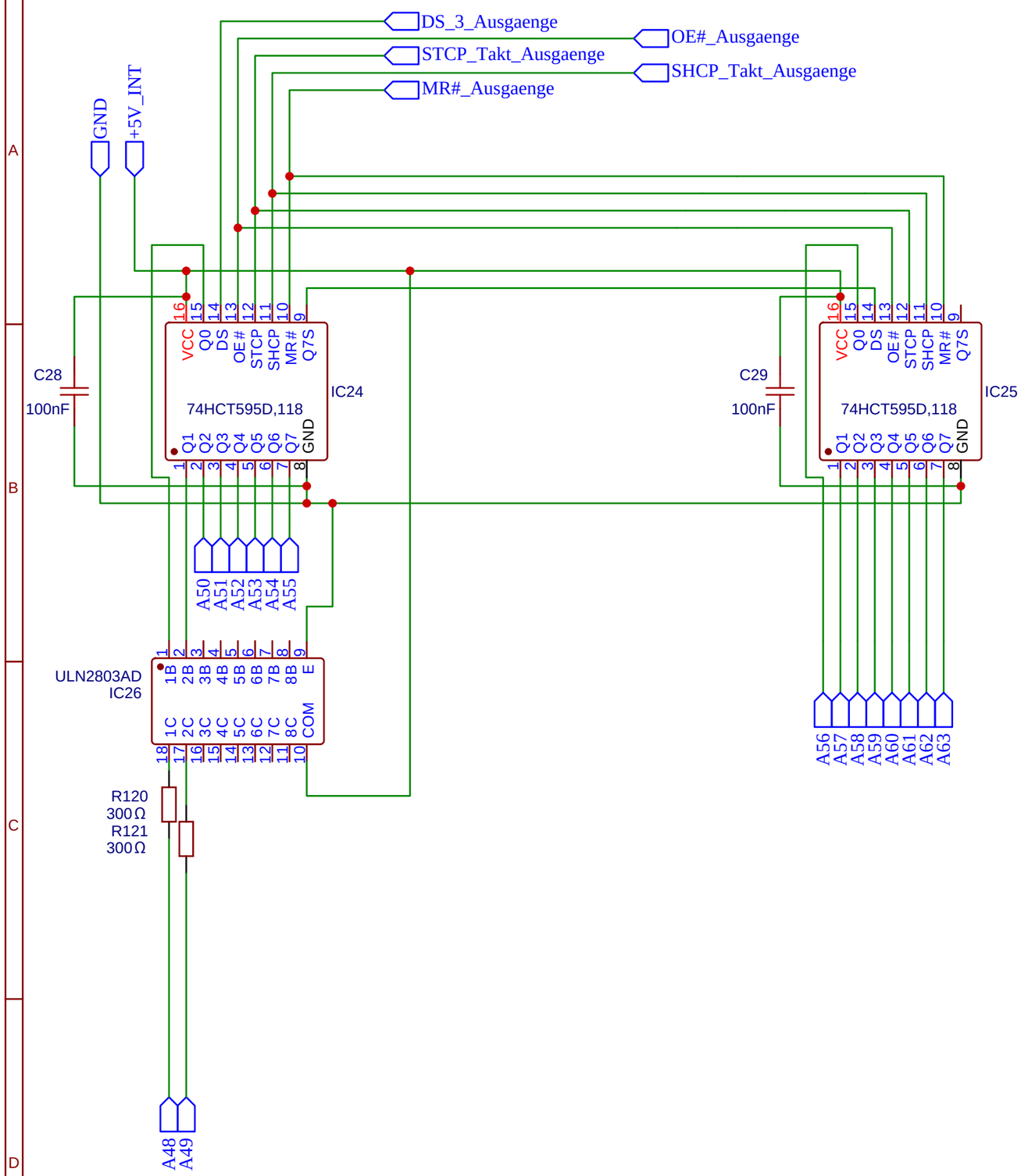

TITLE: 4		REV: 1.0
EasyEDA	Company: Your Company	Sheet: 10/10
	Date: 2021-09-04 Drawn By: Watze	

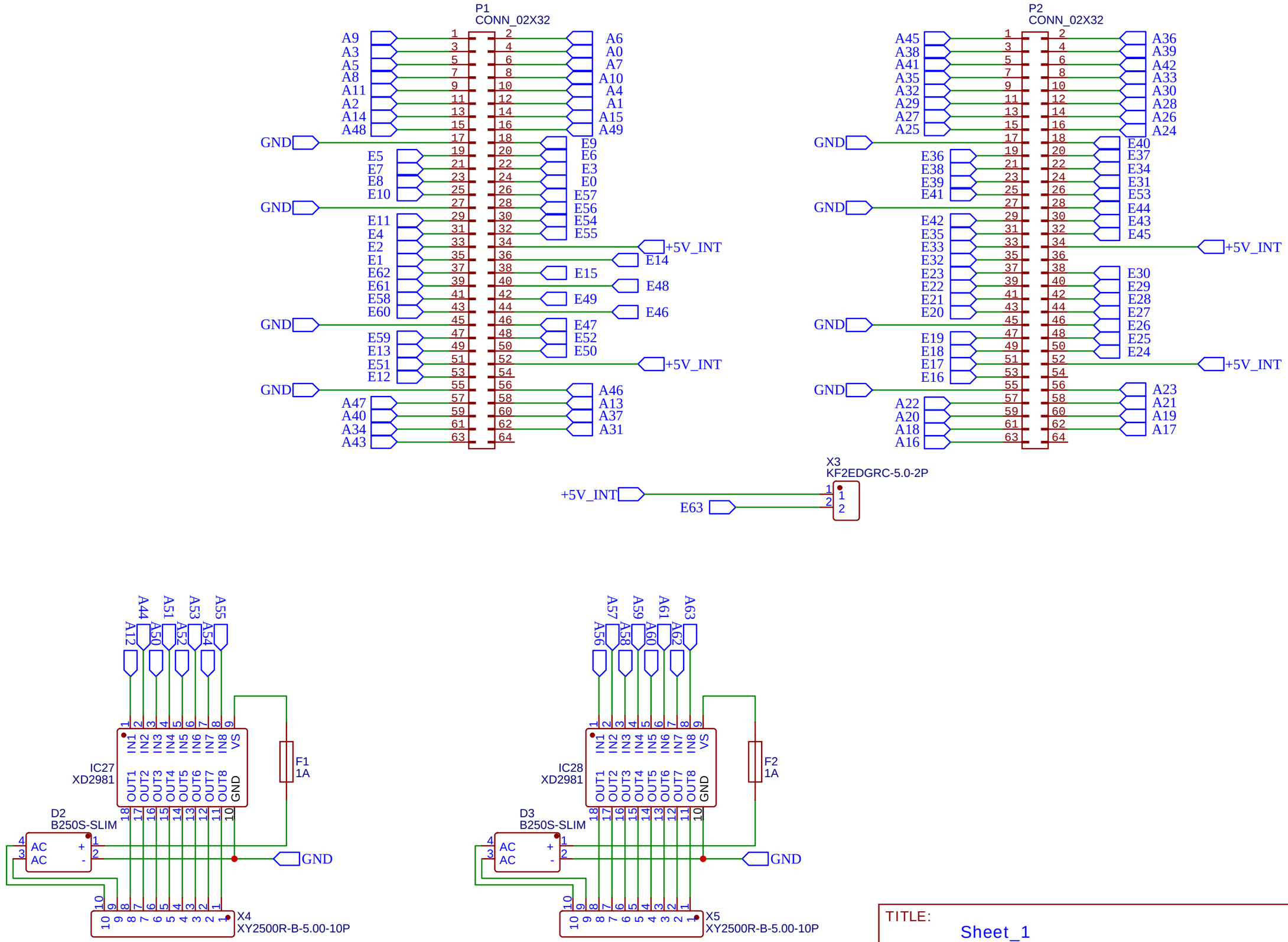

TITLE: Sheet_1	REV: 1.0
Company: Your Company	Sheet: 1/1
Date: 2021-11-15 Drawn By: Watze	