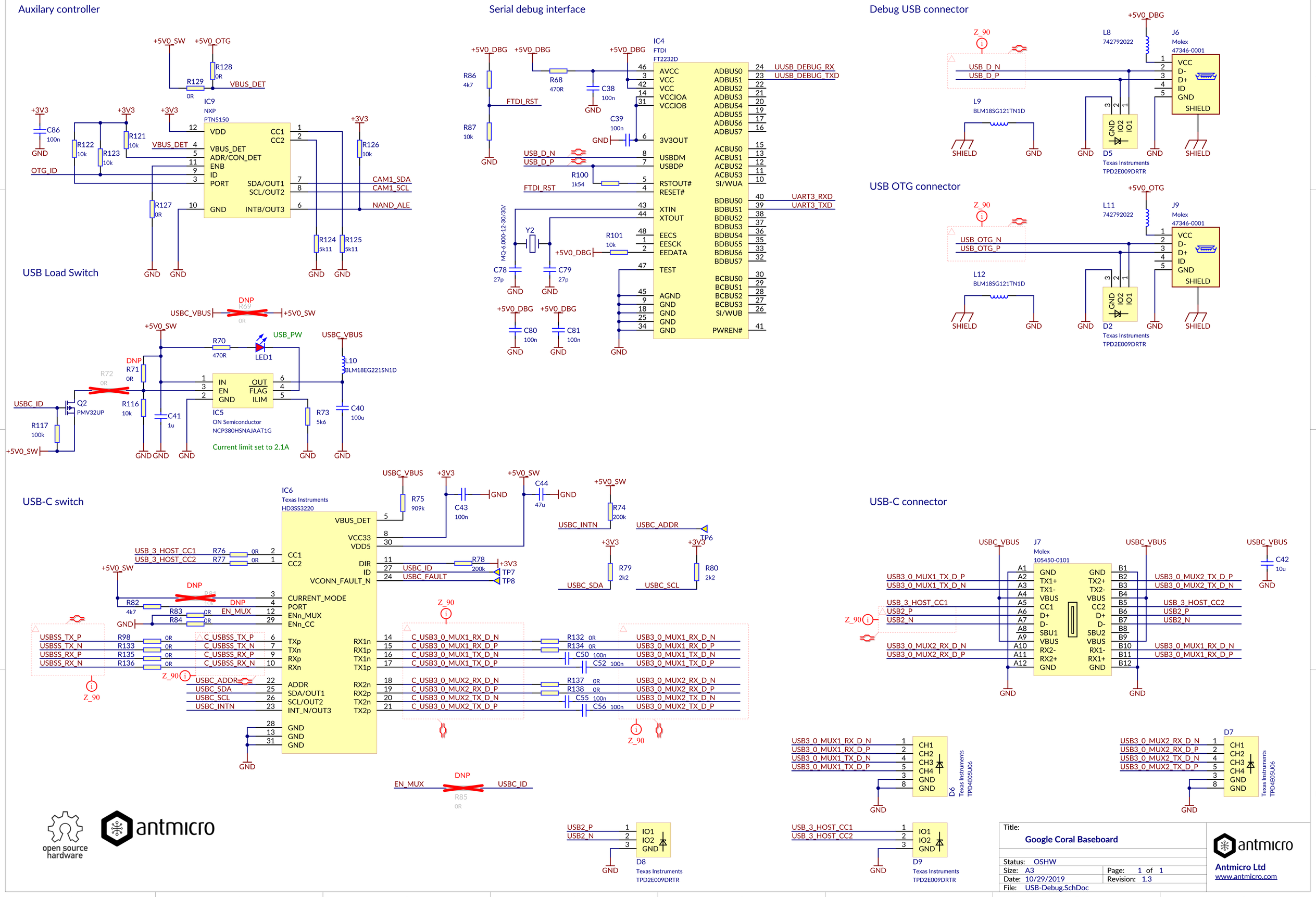
Auxilary controller
IC9
NXP
PTN5150
VDD
VBUS_DET
ADR/CON_DET
ENB
ID
PORT
GND
CC1
CC2
SDA/OUT1
SCL/OUT2
INTB/OUT3
+5V0_SW
+5V0_OTG
VBUS_DET
OTG_ID
CAM1_SDA
CAM1_SCL
NAND_ALE
USB Load Switch
USBC_VBUS
+5V0_SW
DNP
R69
0R
R70
470R
LED1
USB_PW
R71
0R
R72
0R
Q2
PMV32UP
USBC_ID
R116
10k
R117
100k
C41
1u
IC5
ON Semiconductor
NCP380HSNAJAAT1G
IN
EN
GND
OUT
FLAG
ILIM
Current limit set to 2.1A
L10
BLM18EG221SN1D
R73
5k6
C40
100u
Serial debug interface
IC4
FTDI
FT2232D
AVCC
VCC
VCCIOA
VCCIOB
3V3OUT
USBDM
USBDP
RSTOUT#
RESET#
XTIN
XTOUT
EECS
EESCK
EEDATA
TEST
AGND
ADBUS0
ADBUS1
ADBUS2
ADBUS3
ADBUS4
ADBUS5
ADBUS6
ADBUS7
ACBUS0
ACBUS1
ACBUS2
ACBUS3
SI/WUA
BDBUS0
BDBUS1
BDBUS2
BDBUS3
BDBUS4
BDBUS5
BDBUS6
BDBUS7
BCBUS0
BCBUS1
BCBUS2
BCBUS3
SI/WUB
PWREN#
UUSB_DEBUG_RX
UUSB_DEBUG_TXD
UART3_RXD
UART3_TXD
FTDI_RST
USB_D_N
USB_D_P
MQ-6.000-12-30/30/
Debug USB connector
Z_90
L8
742792022
J6
Molex
47346-0001
VCC
D-
D+
ID
GND
SHIELD
L9
BLM18SG121TN1D
D5
Texas Instruments
TPD2E009DRTR
USB OTG connector
USB_OTG_N
USB_OTG_P
L11
J9
L12
D2
USB-C switch
IC6
Texas Instruments
HD3SS3220
VBUS_DET
VCC33
VDD5
CC1
CC2
DIR
ID
VCONN_FAULT_N
CURRENT_MODE
PORT
ENn_MUX
ENn_CC
TXp
TXn
RXp
RXn
ADDR
SDA/OUT1
SCL/OUT2
INT_N/OUT3
RX1n
RX1p
TX1n
TX1p
RX2n
RX2p
TX2n
TX2p
USB_3_HOST_CC1
USB_3_HOST_CC2
USBC_ID
USBC_FAULT
USBC_ADDR
USBC_SDA
USBC_SCL
USBC_INTN
EN_MUX
USBSS_TX_P
USBSS_TX_N
USBSS_RX_P
USBSS_RX_N
C_USBSS_TX_P
C_USBSS_TX_N
C_USBSS_RX_P
C_USBSS_RX_N
C_USB3_0_MUX1_RX_D_N
C_USB3_0_MUX1_RX_D_P
C_USB3_0_MUX1_TX_D_N
C_USB3_0_MUX1_TX_D_P
C_USB3_0_MUX2_RX_D_N
C_USB3_0_MUX2_RX_D_P
C_USB3_0_MUX2_TX_D_N
C_USB3_0_MUX2_TX_D_P
USB3_0_MUX1_RX_D_N
USB3_0_MUX1_RX_D_P
USB3_0_MUX1_TX_D_N
USB3_0_MUX1_TX_D_P
USB3_0_MUX2_RX_D_N
USB3_0_MUX2_RX_D_P
USB3_0_MUX2_TX_D_N
USB3_0_MUX2_TX_D_P
USB2_P
USB2_N
USB-C connector
J7
Molex
105450-0101
USB3_0_MUX1_TX_D_P
USB3_0_MUX1_TX_D_N
USB_3_HOST_CC1
USB2_P
USB2_N
USB3_0_MUX2_RX_D_N
USB3_0_MUX2_RX_D_P
USB3_0_MUX2_TX_D_P
USB3_0_MUX2_TX_D_N
USB_3_HOST_CC2
USB3_0_MUX1_RX_D_N
USB3_0_MUX1_RX_D_P
D6
D7
D8
D9
open source hardware
antmicro
Title:
Google Coral Baseboard
Status: OSHW
Size: A3
Page: 1 of 1
Date: 10/29/2019
Revision: 1.3
File: USB-Debug.SchDoc
Antmicro Ltd
www.antmicro.com

Main DC/DC 5V (5A)

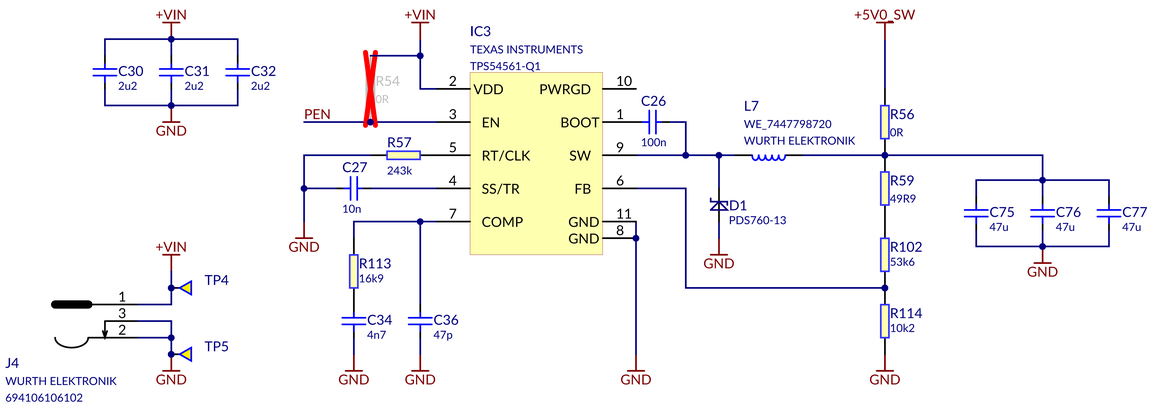

System 3V3 (1A)

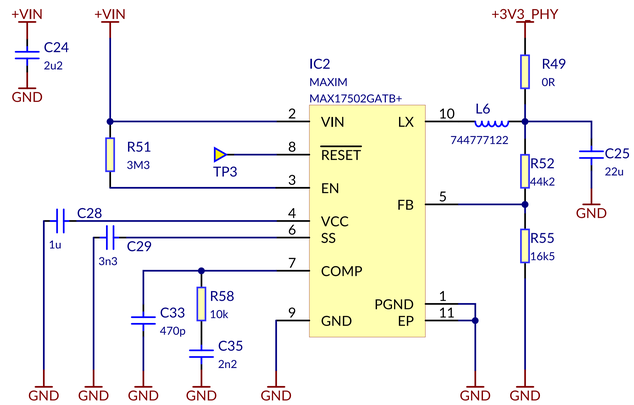

System 1V8 (200mA)

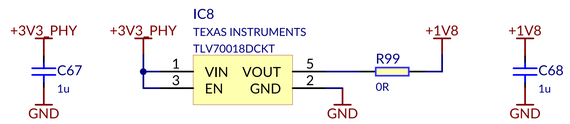

FAN

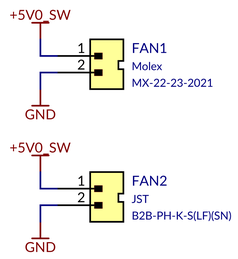

open source hardware

antmicro

Title: Google Coral Baseboard	
Status: OSHW	
Size: A3	Page: 1 of 1
Date: 10/29/2019	Revision: 1.3
File: Supply.SchDoc	

antmicro
Antmicro Ltd
www.antmicro.com

SoM connectors

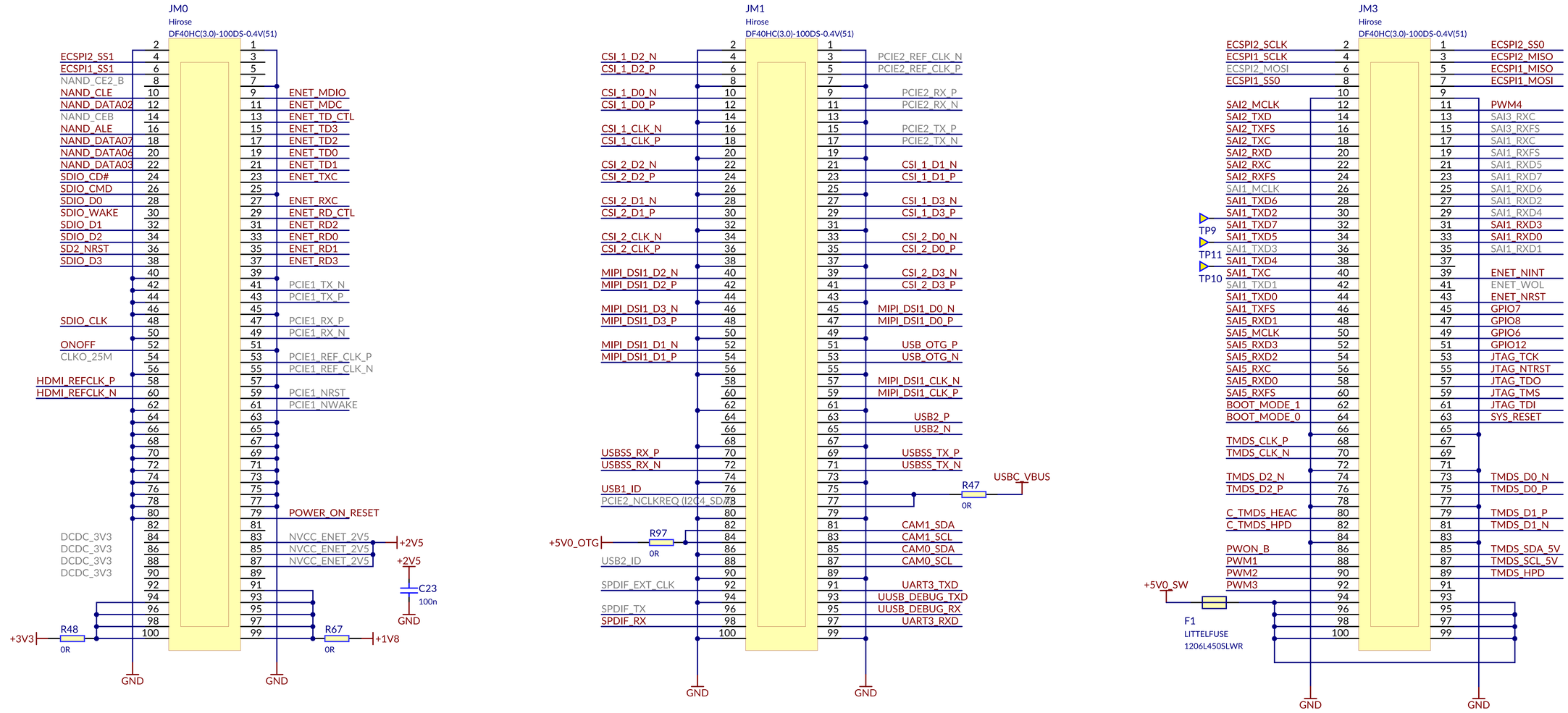

System buttons

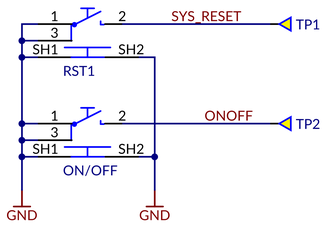

Boot mode

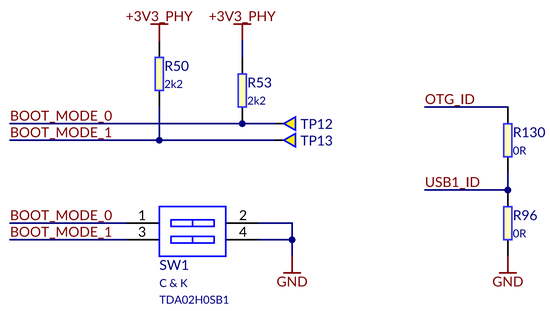

SoM model

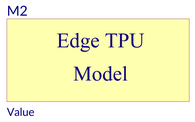

open source hardware

antmicro

Title: Google Coral Baseboard	
Status: OSHW	
Size: A3	Page: 1 of 1
Date: 10/29/2019	Revision: 1.3
File: SoM.SchDoc	

antmicro
Antmicro Ltd
www.antmicro.com

HDMI reference clock

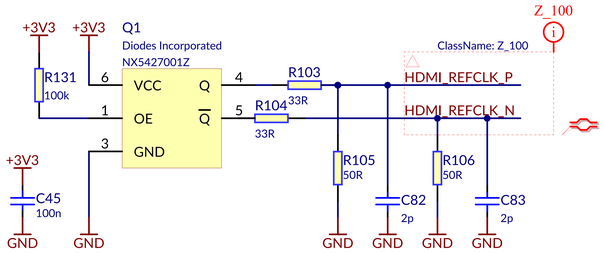

Capacitive coupling

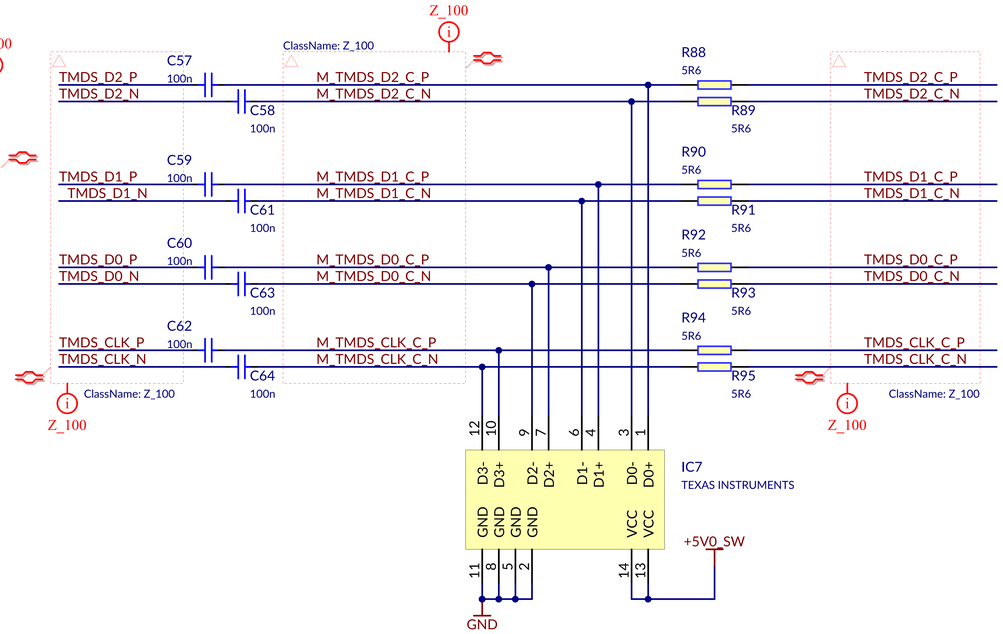

HDMI connector

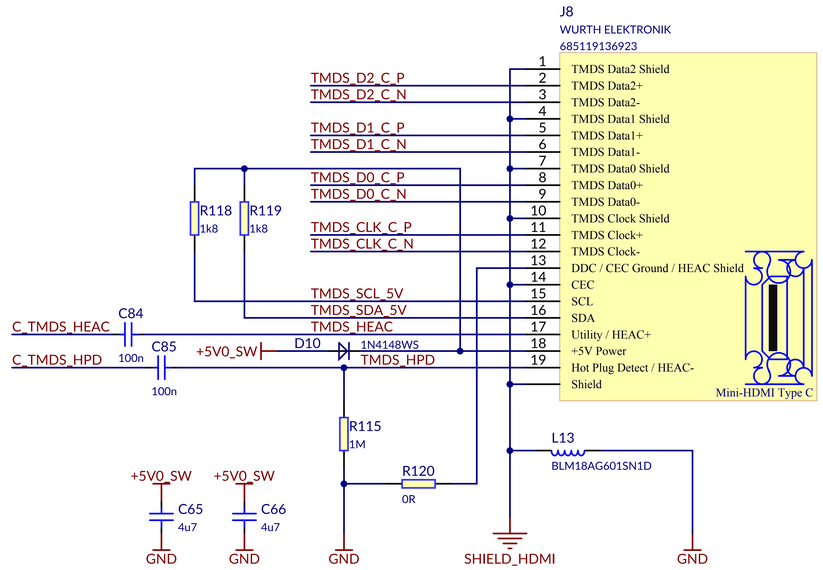

SD Card

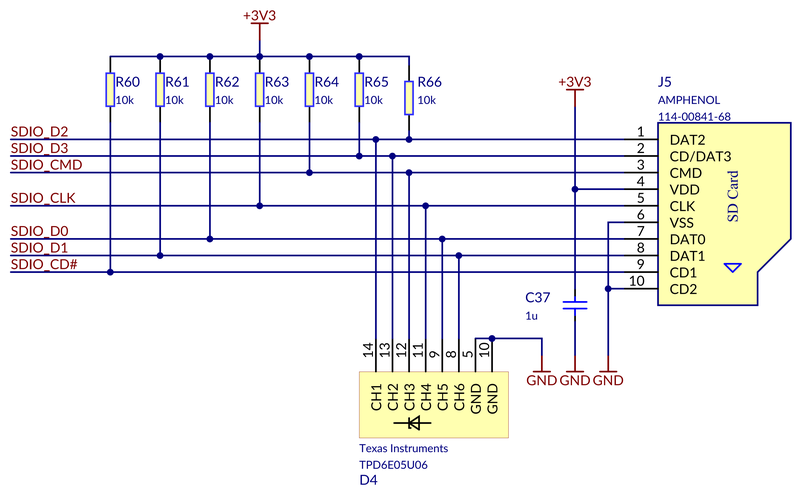

open source hardware

antmicro

Title: Google Coral Baseboard	
Status: OSHW	
Size: A3	Page: 1 of 1
Date: 10/29/2019	Revision: 1.3
File: Interfaces.SchDoc	

antmicro
Antmicro Ltd
www.antmicro.com

PHY configuration

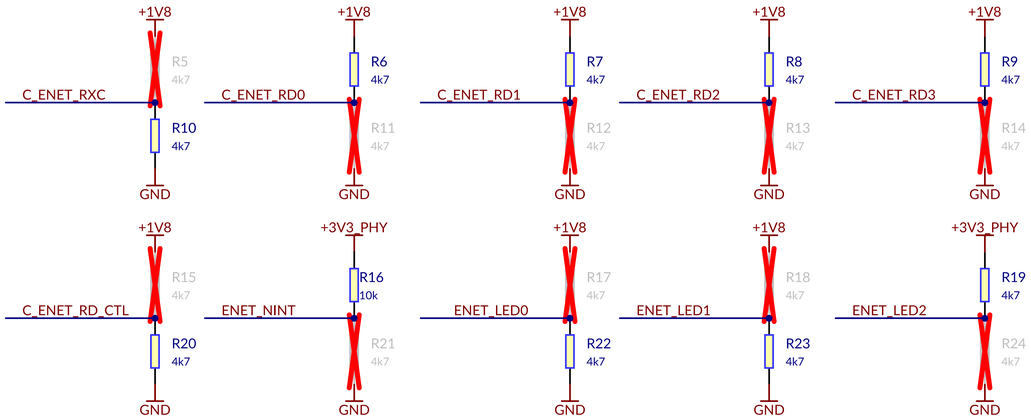

Supply filtering

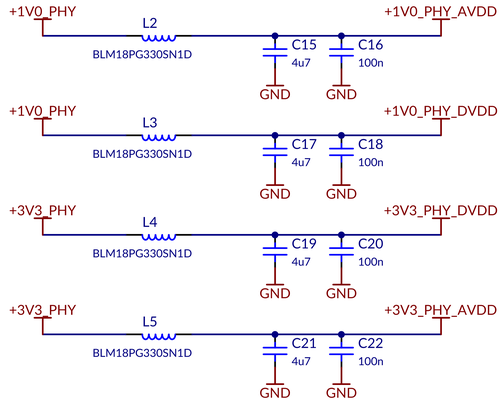

PHY controller

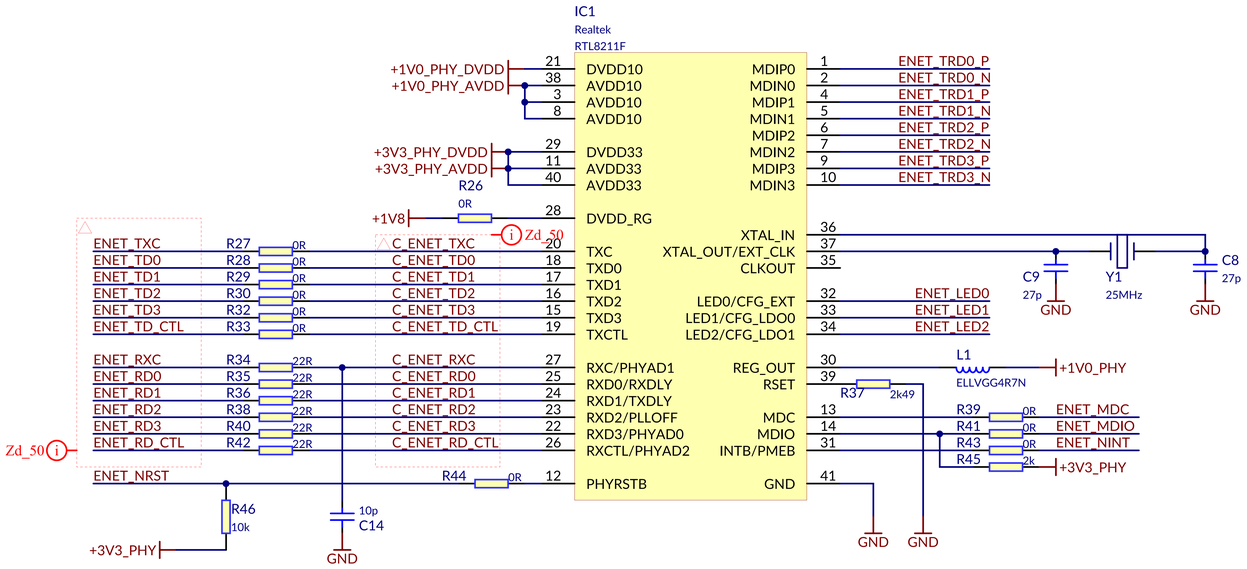

Ethernet connector

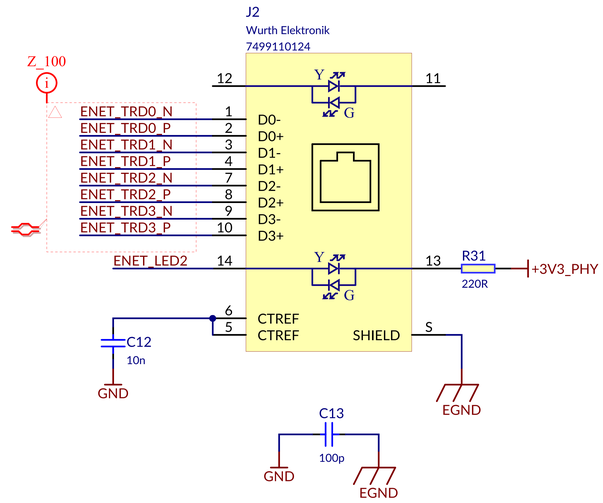

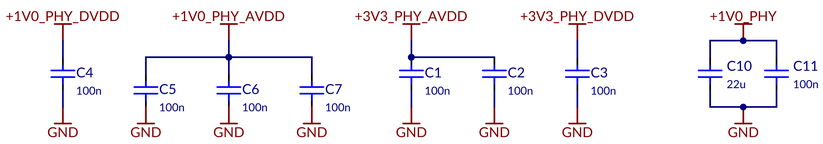

open source hardware

antmicro

Title: Google Coral Baseboard	
Status: OSHW	
Size: A3	Page: 1 of 1
Date: 10/29/2019	Revision: 1.3
File: Ethernet.SchDoc	

antmicro
Antmicro Ltd
www.antmicro.com

MIPI CSI-2 Camera Interface

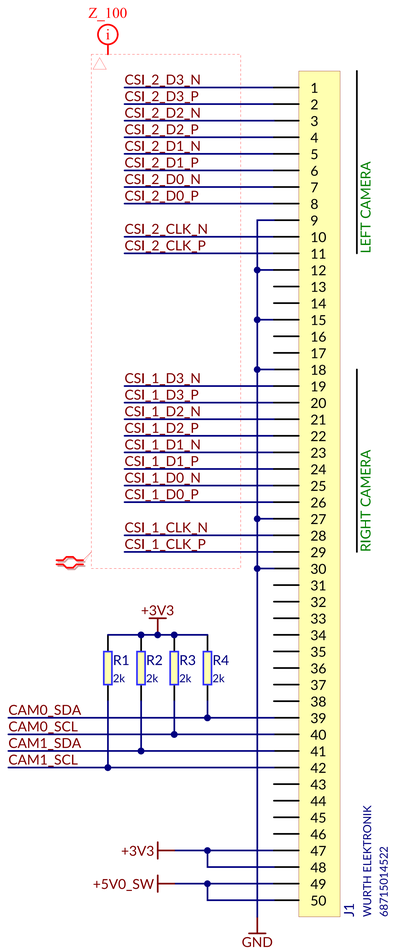

open source hardware

antmicro

Title: Google Coral Baseboard	
Status: OSHW	
Size: A3	Page: 1 of 6
Date: 10/29/2019	Revision: 1.3
File: CSI.SchDoc	

antmicro

Antmicro Ltd
www.antmicro.com