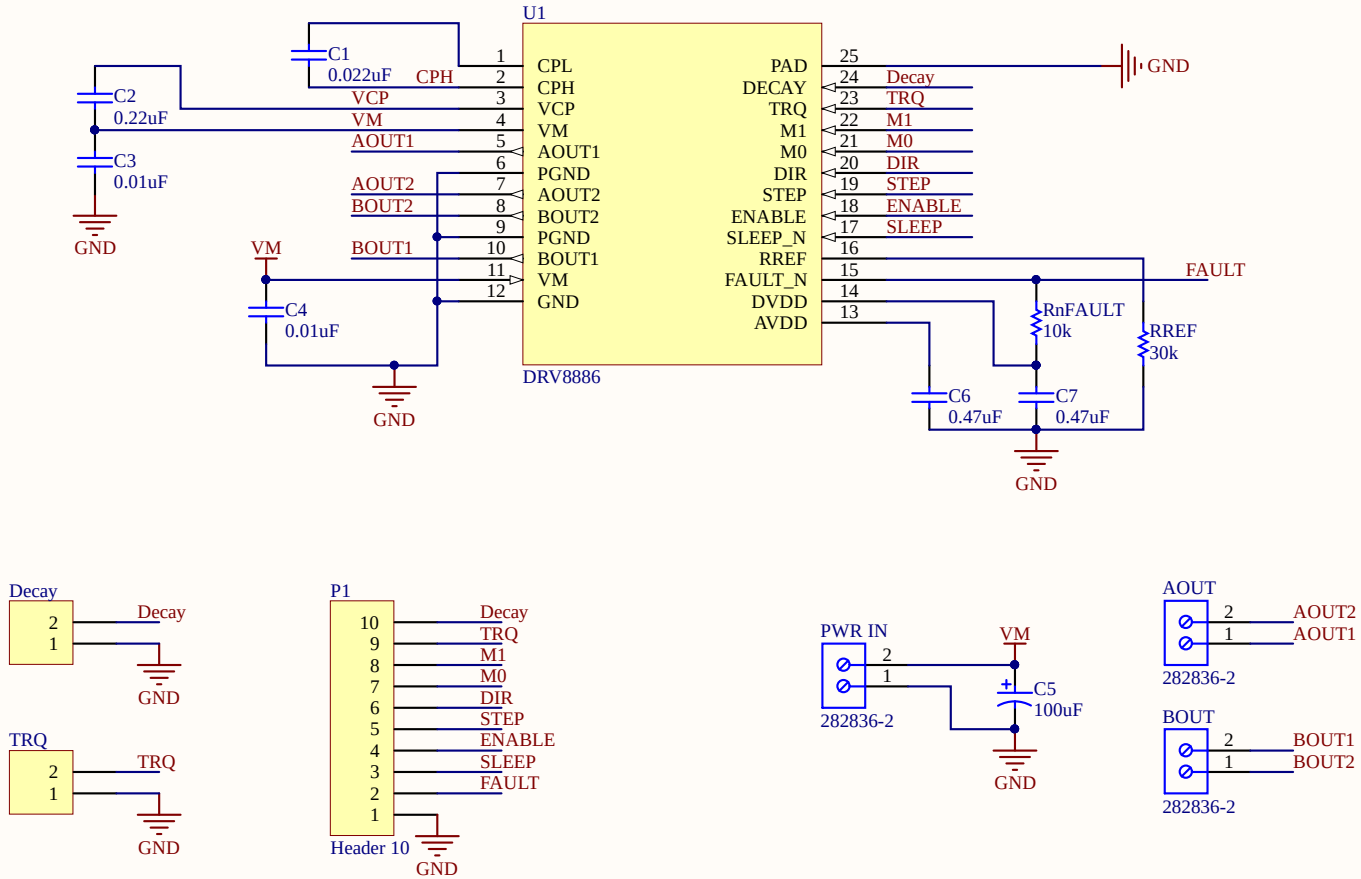

Title		
Size A	Number	Revision
Date: 1/2/2020	Sheet of	
File: C:\Users\..\Capstone_Motor_Driver.SchDoc	Drawn By:	