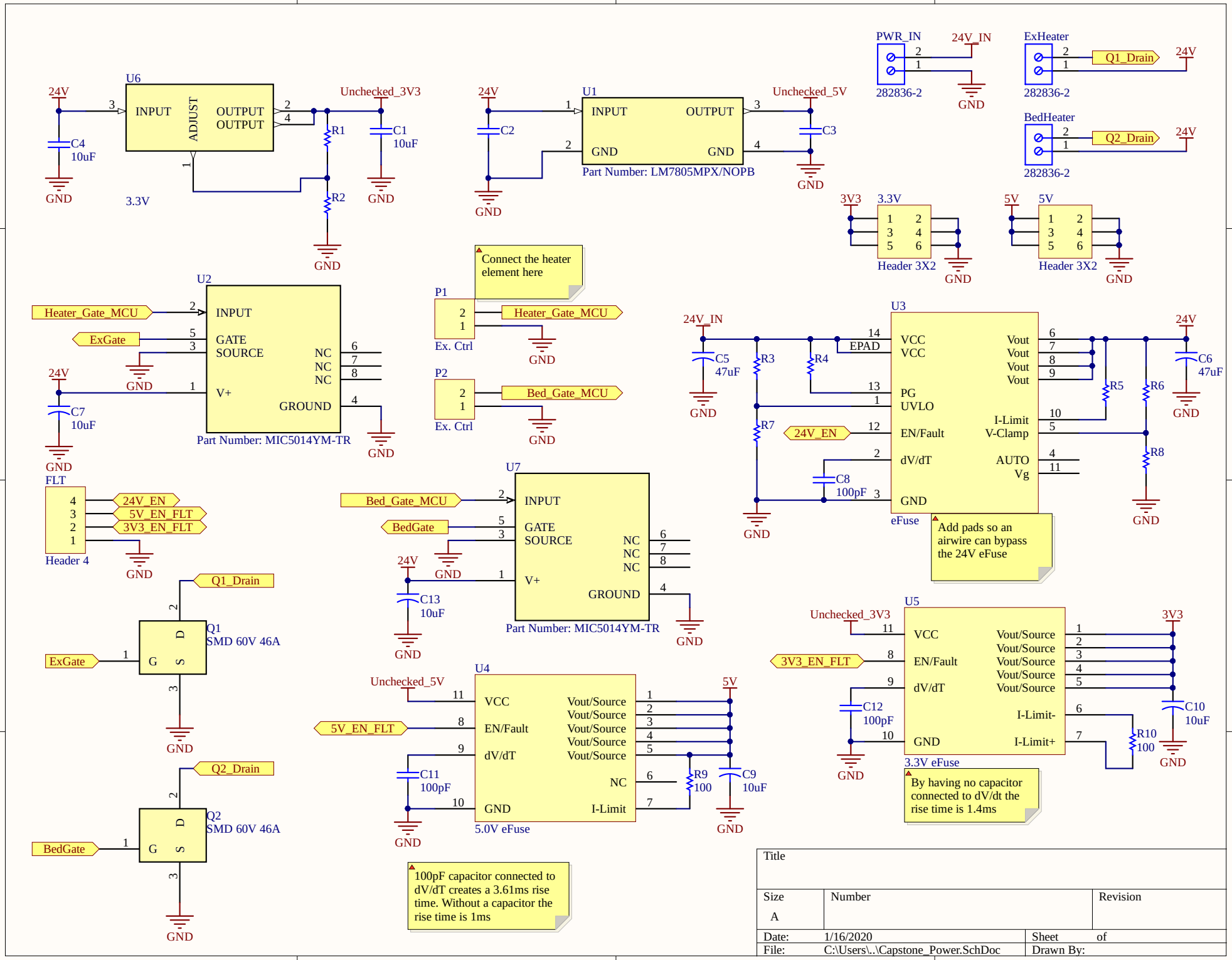
U6
INPUT
ADJUST
OUTPUT
OUTPUT
24V
C4
10uF
GND
3.3V
R1
R2
C1
10uF
Unchecked_3V3
U1
INPUT
OUTPUT
GND
GND
24V
C2
Unchecked_5V
C3
Part Number: LM7805MPX/NOPB
PWR_IN
24V_IN
282836-2
ExHeater
Q1_Drain
BedHeater
Q2_Drain
3V3
3.3V
Header 3X2
5V
U2
Heater_Gate_MCU
ExGate
INPUT
GATE
SOURCE
NC
NC
NC
V+
GROUND
C7
10uF
Part Number: MIC5014YM-TR
Connect the heater element here
P1
Ex. Ctrl
P2
Bed_Gate_MCU
U3
VCC
VCC
EPAD
PG
UVLO
EN/Fault
dV/dT
GND
Vout
Vout
Vout
Vout
I-Limit
V-Clamp
AUTO
Vg
24V_EN
C5
47uF
C6
47uF
R3
R4
R5
R6
R7
R8
C8
100pF
eFuse
Add pads so an airwire can bypass the 24V eFuse
FLT
24V_EN
5V_EN_FLT
3V3_EN_FLT
Header 4
Bed_Gate_MCU
BedGate
U7
C13
10uF
Part Number: MIC5014YM-TR
Q1_Drain
Q1
SMD 60V 46A
ExGate
Q2_Drain
Q2
SMD 60V 46A
BedGate
U4
Unchecked_5V
5V_EN_FLT
VCC
EN/Fault
dV/dT
GND
Vout/Source
NC
I-Limit
C11
100pF
R9
100
C9
10uF
5.0V eFuse
100pF capacitor connected to dV/dT creates a 3.61ms rise time. Without a capacitor the rise time is 1ms
U5
Unchecked_3V3
3V3_EN_FLT
VCC
EN/Fault
dV/dT
GND
Vout/Source
I-Limit-
I-Limit+
C12
100pF
R10
100
C10
10uF
3.3V eFuse
By having no capacitor connected to dV/dt the rise time is 1.4ms
Title
Size
A
Number
Revision
Date: 1/16/2020
Sheet of
File: C:\Users\..\Capstone_Power.SchDoc
Drawn By:

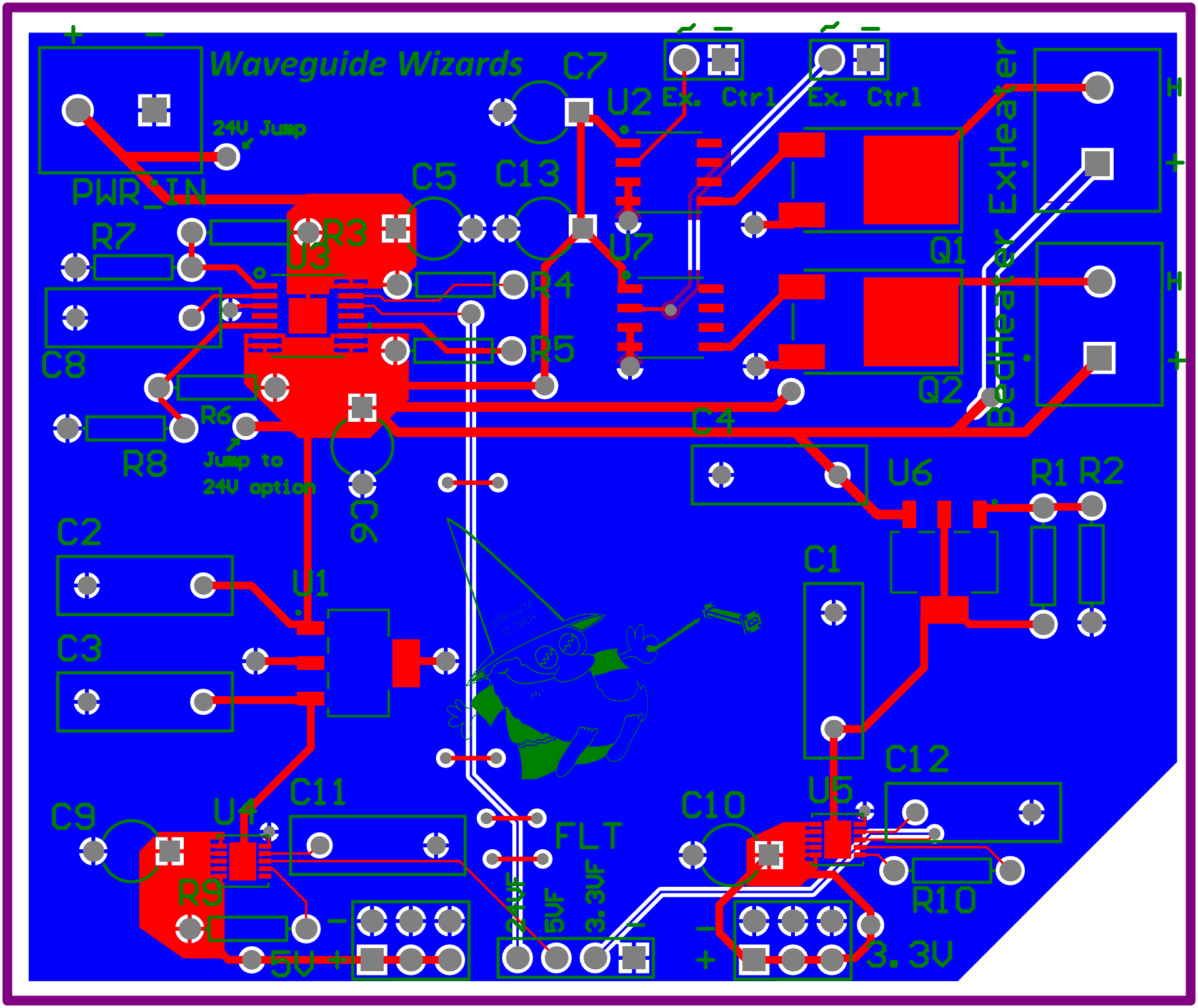
Waveguide Wizards
PWR_IN
24V Jump
C7
U2
Ex. Ctrl
Ex. Ctrl
C5
C13
R3
U3
U7
R7
R4
R5
Q1
Q2
Bed Heater
Ex. Heater
C8
R6
R8
Jump to
24V option
C6
C4
U6
R1
R2
C2
U1
C1
C3
C12
C9
U4
C11
C10
U5
FLT
R9
R10
5V
3.3V