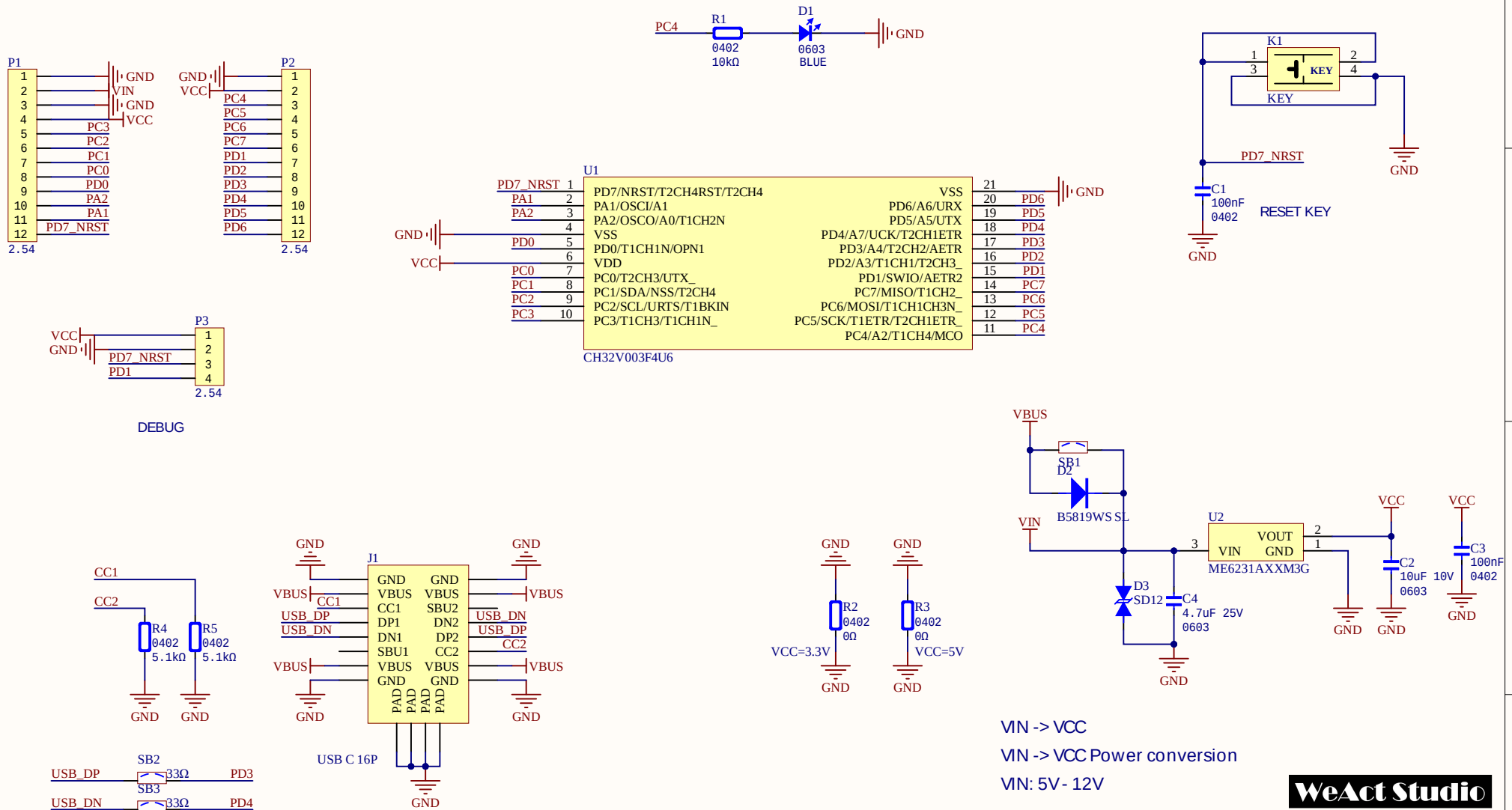
P1
P2
P3
PC4
R1
0402
10kΩ
D1
0603
BLUE
GND
K1
KEY
PD7_NRST
C1
100nF
0402
RESET KEY
U1
CH32V003F4U6
PD7/NRST/T2CH4RST/T2CH4
PA1/OSCI/A1
PA2/OSCO/A0/T1CH2N
VSS
PD0/T1CH1N/OPN1
VDD
PC0/T2CH3/UTX_
PC1/SDA/NSS/T2CH4
PC2/SCL/URTS/T1BKIN
PC3/T1CH3/T1CH1N_
VSS
PD6/A6/URX
PD5/A5/UTX
PD4/A7/UCK/T2CH1ETR
PD3/A4/T2CH2/AETR
PD2/A3/T1CH1/T2CH3_
PD1/SWIO/AETR2
PC7/MISO/T1CH2_
PC6/MOSI/T1CH1CH3N_
PC5/SCK/T1ETR/T2CH1ETR_
PC4/A2/T1CH4/MCO
DEBUG
VBUS
SB1
D2
B5819WS SL
VIN
U2
ME6231AXXM3G
VOUT
VIN
GND
VCC
C2
10uF 10V
0603
C3
100nF
0402
D3
SD12
C4
4.7uF 25V
0603
R2
0402
0Ω
VCC=3.3V
R3
0402
0Ω
VCC=5V
CC1
CC2
R4
0402
5.1kΩ
R5
0402
5.1kΩ
J1
USB C 16P
USB_DP
USB_DN
SB2
SB3
SB4
33Ω
1.5kΩ
PD3
PD4
PD5
Type-C
Type-C interface
VIN -> VCC
VIN -> VCC Power conversion
VIN: 5V - 12V
WeAct Studio
Title
WeActStudio.CH32V003CoreBoard
Size
A4
Number
Revision
V1.0
Date: 11/07/2023
Sheet of
File: E:\WeActStudio\..\WeAct-CH32V003_CoreBoard.SchDoc