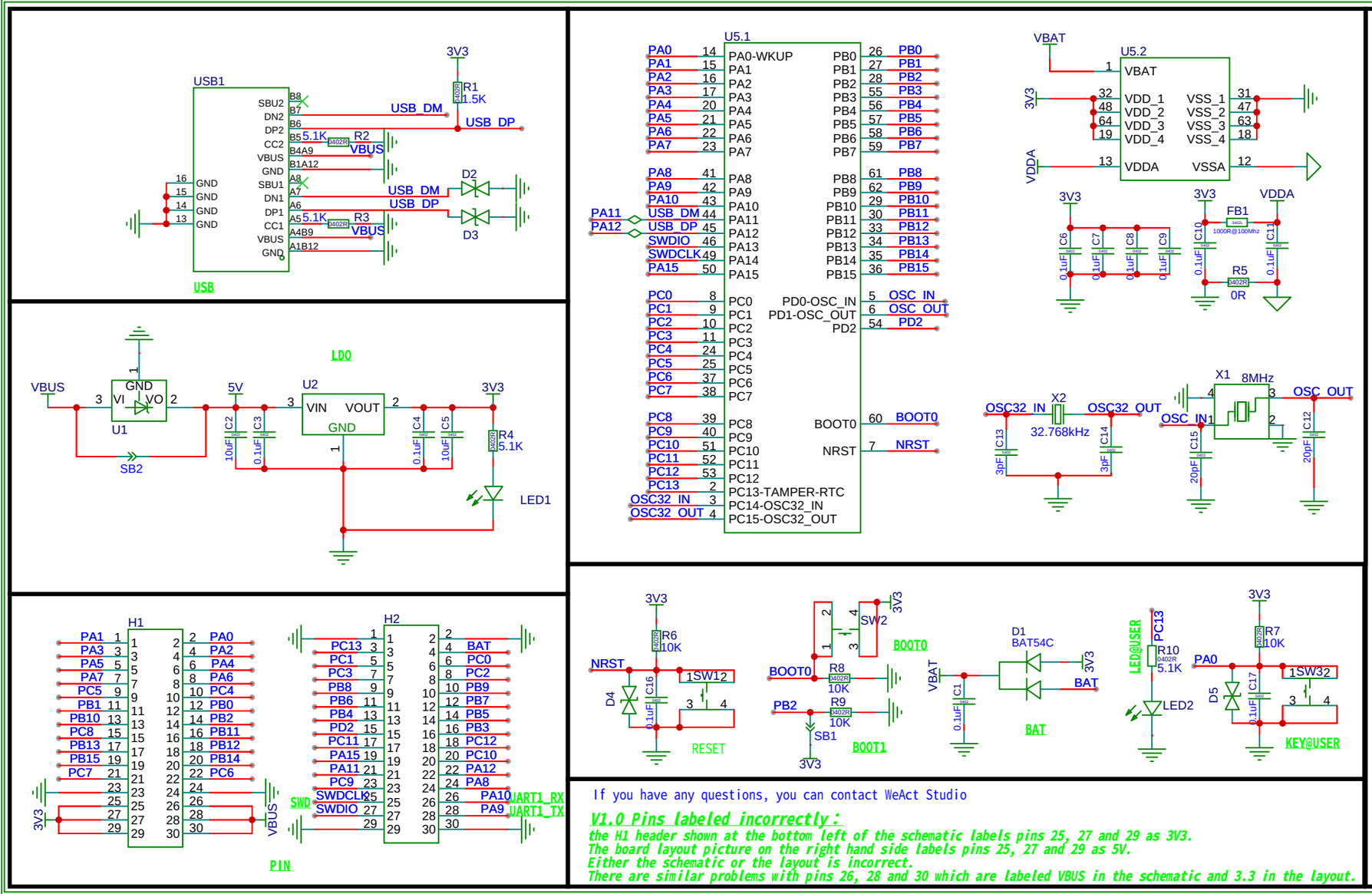
USB1
USB
3V3
R1 1.5K
USB_DM
USB_DP
R2 5.1K
R3 5.1K
VBUS
D2
D3
LDO
U1
U2
VBUS
5V
3V3
VIN
VOUT
GND
SB2
R4 5.1K
LED1
H1
H2
PIN
SWD
UART1_RX
UART1_TX
U5.1
U5.2
VBAT
VDDA
PA11
PA12
OSC32_IN
OSC32_OUT
OSC_IN
OSC_OUT
X1 8MHz
X2 32.768kHz
FB1
R5 0R
BOOT0
NRST
R6 10K
R7 10K
R8 10K
R9 10K
SW2
SB1
BOOT1
RESET
D1 BAT54C
BAT
LED@USER
R10 5.1K
LED2
KEY@USER
If you have any questions, you can contact WeAct Studio
V1.0 Pins labeled incorrectly:
the H1 header shown at the bottom left of the schematic labels pins 25, 27 and 29 as 3V3.
The board layout picture on the right hand side labels pins 25, 27 and 29 as 5V.
Either the schematic or the layout is incorrect.
There are similar problems with pins 26, 28 and 30 which are labeled VBUS in the schematic and 3.3 in the layout.
LED@C13. RST BOOT KEY KEY@A0
PWR
LED
DIO CLK SWD
TX RX UART1
A13 A14 C9 A11 A15
A9 A10 A8 A12 A10
G G 3.3 3.3 5V 5V
3.3V
5V
WeAct Studio