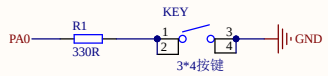

用户按键
User KEY

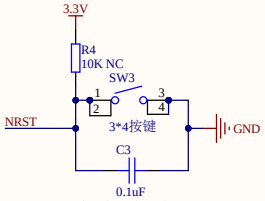

复位电路
Reset circuit

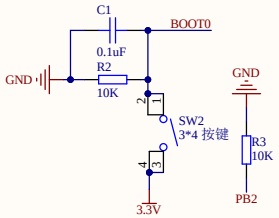

BOOT设置
BOOT Settings

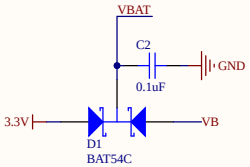

RTC电源
RTC circuit

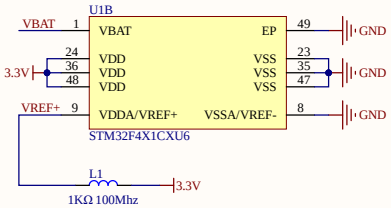

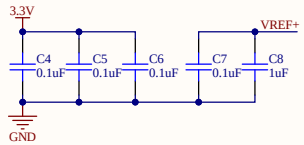

STM32电源部分
STM32 Power supply

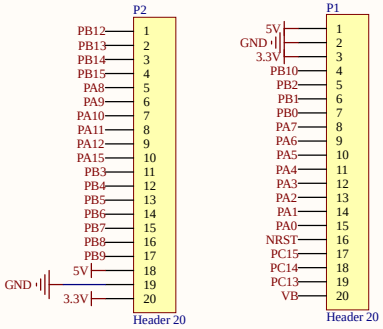

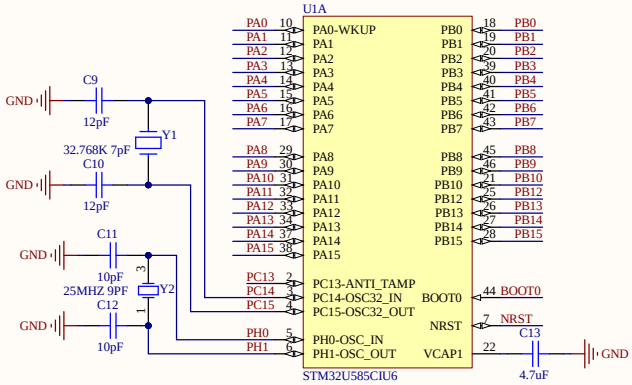

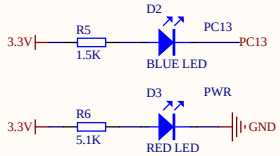

指示灯
Indicator light

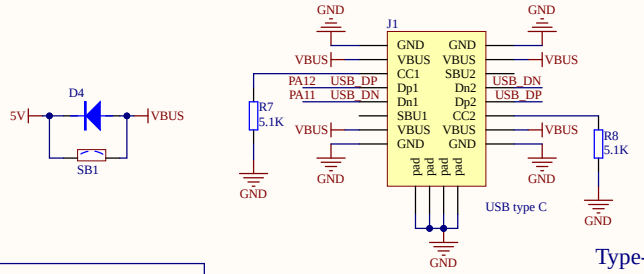

Type-C 接口
Type-C interface

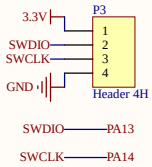

SW 调试下载接口
SW debug download interface

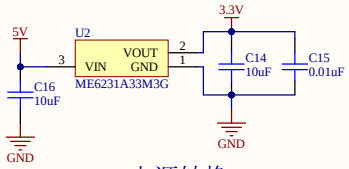

5V -> 3.3V 电源转换
5V -> 3.3V Power conversion

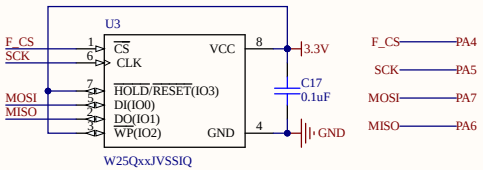

FLASH 自行购买焊接

WeAct Studio

Title	WeActStudio.STM32U585Cx_CoreBoard	
Size A3	Number	Revision V3.1
Date: 10/22/2024	Sheet of	
File: E:\WeActStudio\..\WeActStudio.STM32U585Cx_CoreBoard.SchDoc		