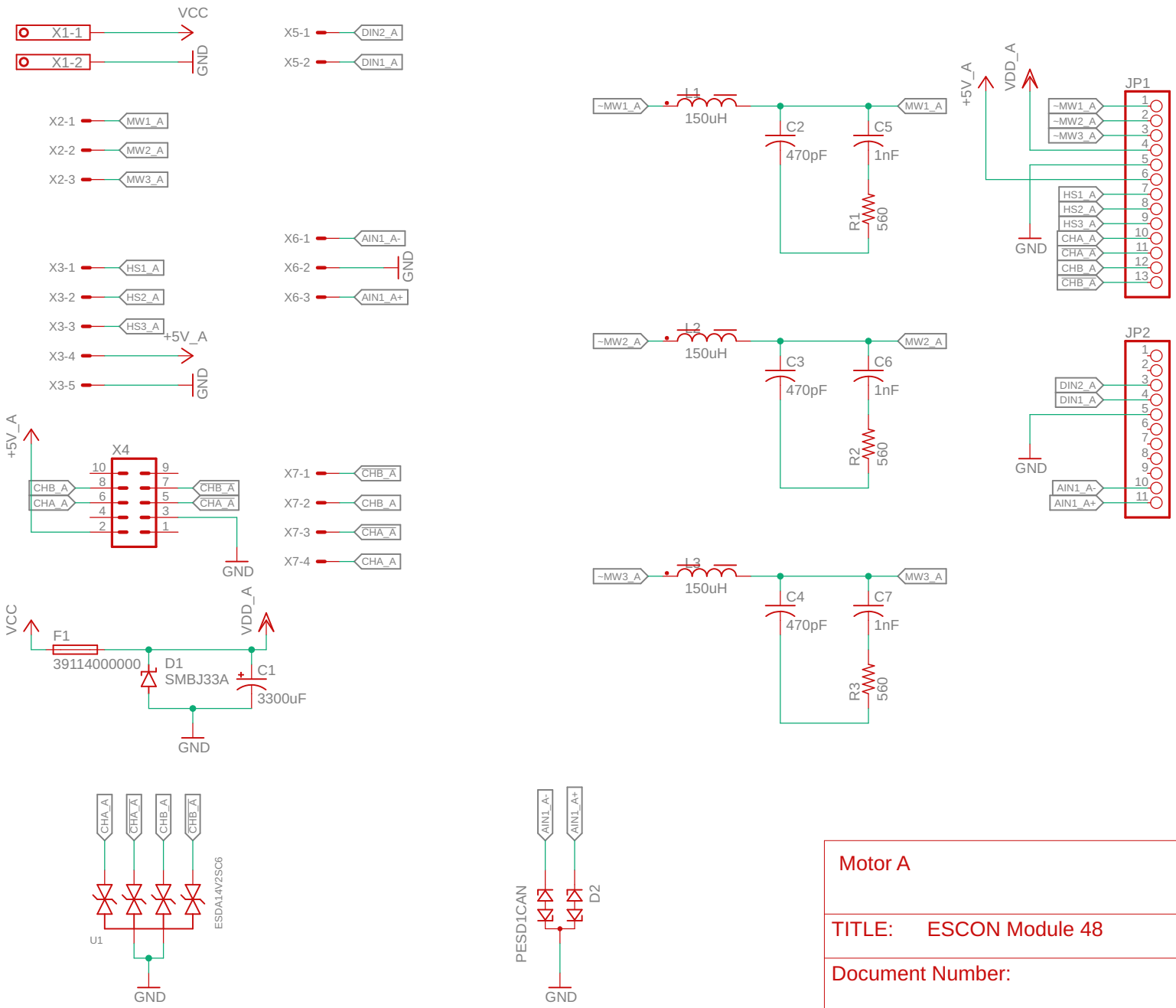

Motor A

TITLE: ESCON Module 48

Document Number:

REV:

Date: 6/18/2023 8:04 PM

Sheet: 1/3

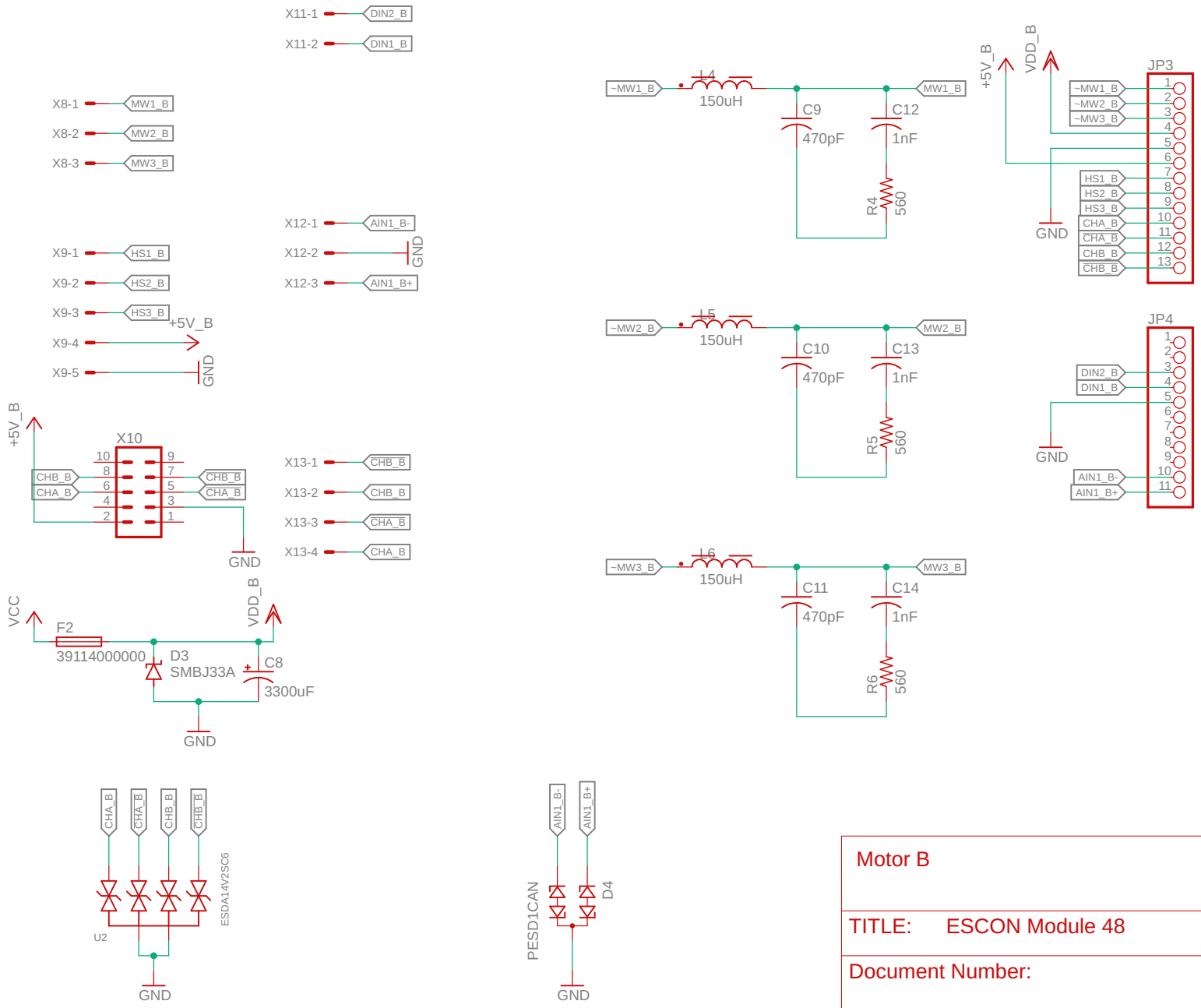

Motor B

TITLE: ESCON Module 48

Document Number:

REV:

Date: 6/18/2023 8:04 PM

Sheet: 2/3

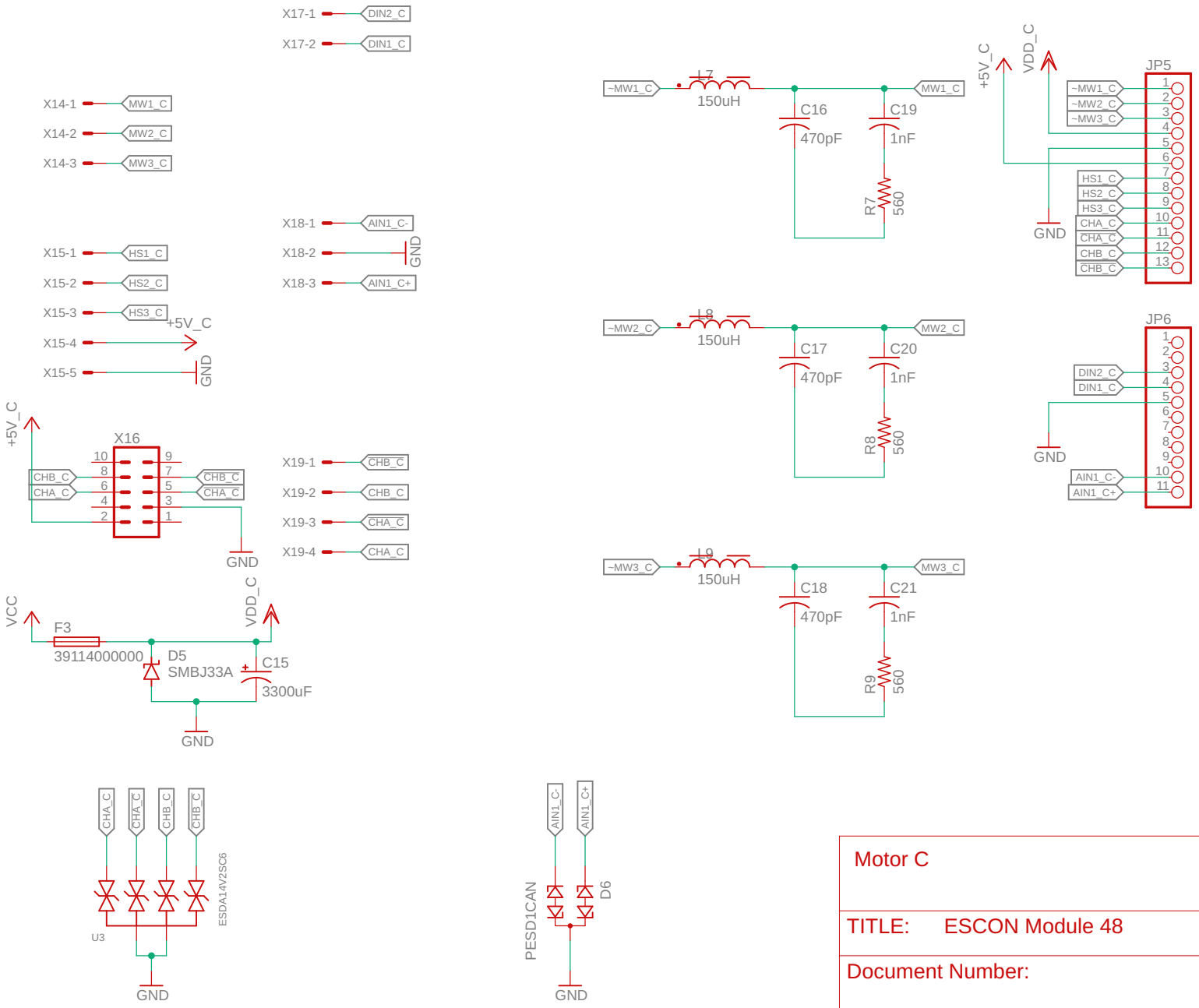

Motor C	
TITLE: ESCON Module 48	
Document Number:	REV:
Date: 6/18/2023 8:04 PM	Sheet: 3/3