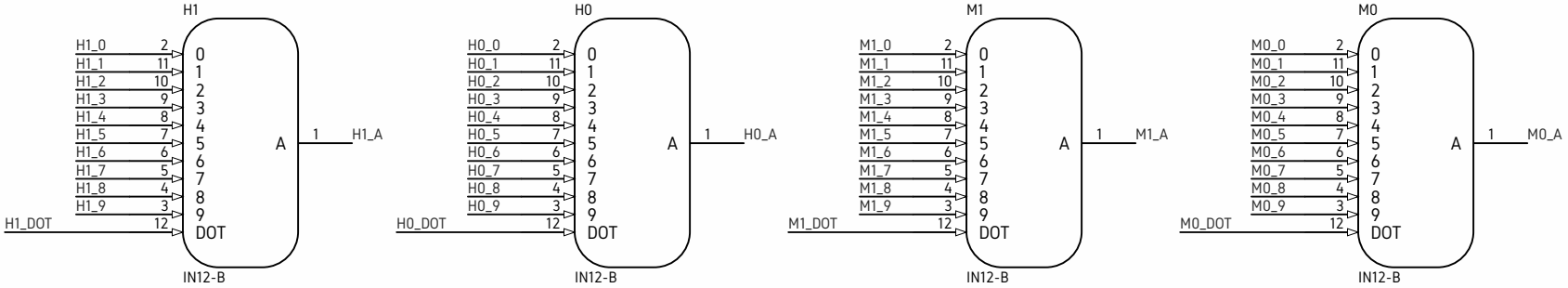

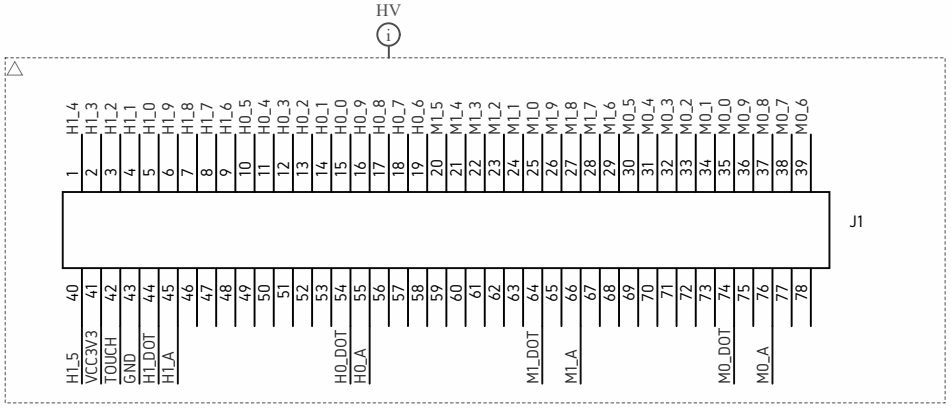

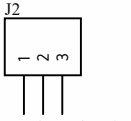

Connector: 2x40 2.54mm (one row cut off)

NIXIE BOARD

REV B MLADEN DINIC 2018