GRUNDFOS **DATA BOOKLET**

CR5-5 A-A-A-E-HQQE 1x220/240 50HZ

Grundfos pump 96528690

Thank you for your interest in our products. Please contact us for more information, or visit our website

https://www.lenntech.com/grundfos/CRFAM/96528690/CR-5-5-A-A-A-E-HQQE.html

info@lenntech.com
tel. +31 152 610 900
fax. +31 152 616 289

Position	Qty.	Description
	1	**CR 5-5 A-A-A-E-HQQE**

Product No.: On request

Vertical, multistage centrifugal pump with inlet and outlet ports on same the level (inline). The pump head and base are in cast iron – all other wetted parts are in stainless steel. A cartridge shaft seal ensures high reliability, safe handling, and easy access and service. Power transmission is via a rigid split coupling. Pipe connection is via oval flanges with internal Rp threads.

The pump is fitted with a 1-phase, fan-cooled asynchronous motor.

Further product details

Steel, cast iron and aluminium components have an epoxy-based coating made in a cathodic electro-deposition (CED) process. CED is a high-quality dip-painting process where an electrical field around the products ensures deposition of paint particles as a thin, well-controlled layer on the surface. An integral part of the process is a pretreatment. The entire process consists of these elements:

1) Alkaline-based cleaning.
2) Zinc phosphating.
3) Cathodic electro-deposition.
4) Curing to a dry film thickness 18-22 my m.

The colour code for the finished product is NCS 9000/RAL 9005.

Pump

A standard split coupling connects the pump and motor shaft. It is enclosed in the pump head/motor stool by means of two coupling guards.

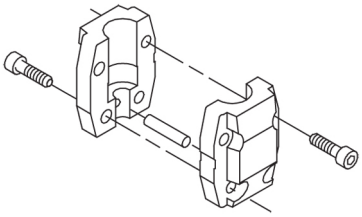

The pump head, pump head cover and flange for motor mounting is made in one piece. The pump head has a combined 1/2" priming plug and vent screw.

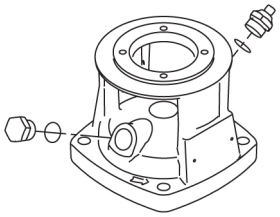

The pump is fitted with a balanced O-ring seal unit with a rigid torque-transmission system. This seal type is assembled in a cartridge unit which makes replacement safe and easy. Due to the balancing, this seal type is suitable for high-pressure applications. The cartridge construction also protects the pump shaft from possible wear from a dynamic O-ring between pump shaft and shaft seal.

Primary seal:

- Rotating seal ring material: silicon carbide (SiC)
- Stationary seat material: silicon carbide (SiC)

This material pairing is used where higher corrosion resistance is required. The high hardness of this material pairing offers good resistance against abrasive particles.

Secondary seal material: EPDM (ethylene-propylene rubber)

EPDM has excellent resistance to hot water. EPDM is not suitable for mineral oils.

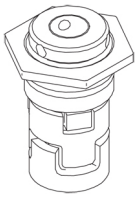

The shaft seal is screwed into the pump head.

The chambers and impellers are made of stainless-steel sheet. The chambers are provided with a PTFE neck ring offering improved sealing and high efficiency. The impellers have smooth surfaces, and the shape of the blades ensure a high efficiency.

The base is made of cast iron. The oval flanges are bolted to the base. The outlet side of the base has a combined drain plug and bypass valve. The pump is secured to the foundation by four bolts through the base plate.

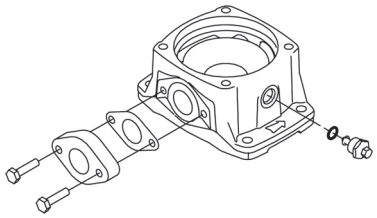

Motor

The motor is a totally enclosed, fan-cooled motor with principal dimensions to IEC and DIN standards. The motor is flange-mounted with tapped-hole flange (FT).

Motor-mounting designation in accordance with IEC 60034-7: IM B 14 (Code I) / IM 3601 (Code II).

Electrical tolerances comply with IEC 60034.

The motor has built-in thermal protection (PTO current and temperature sensors) in accordance with IEC 60034-11 and requires no further motor protection. The protection reacts to both slow- and quick-rising temperatures, e.g. constant overload and stalled conditions.

As the thermal protection incorporates automatic reset, the motor must be connected in a way which ensures that the automatic reset cannot cause accidents.

Technical data

Controls:

Frequency converter:	NONE

Liquid:

Pumped liquid:	Water
Liquid temperature range:	-20 .. 120 °C
Liquid temperature during operation:	20 °C
Density:	998.2 kg/m³

Technical:

Rated flow:	5.8 m³/h
Rated head:	21.7 m
Pump orientation:	Vertical
Shaft seal arrangement:	Single
Code for shaft seal:	HQQE
Approvals on nameplate:	CE, EAC,ACS
Curve tolerance:	ISO9906:2012 3B

Materials:

Base:	Cast iron EN 1561 EN-GJL-200 ASTM A48-25B
Impeller:	Stainless steel EN 1.4301 AISI 304
Bearing:	SIC

Position	Qty.	Description

Installation:

Maximum ambient temperature:	40 °C
Maximum operating pressure:	16 bar
Max pressure at stated temp:	16 bar / 120 °C
	16 bar / -20 °C
Type of connection:	Oval / Rp
Size of inlet connection:	1 1/4 inch
Size of outlet connection:	1 1/4 inch
Pressure rating for pipe connection:	PN 16
Flange size for motor:	FT100

Electrical data:

Motor standard:	IEC
Motor type:	80B
Rated power - P2:	0.75 kW
Power (P2) required by pump:	0.75 kW
Mains frequency:	50 Hz
Rated voltage:	1 x 220-230/240 V
Rated current:	5.10/4.75 A
Starting current:	300 %
Cos phi - power factor:	0.99
Rated speed:	2780 rpm
Efficiency:	72.1%
Motor efficiency at full load:	72.1 %
Number of poles:	2
Enclosure class (IEC 34-5):	55 Dust/Jetting
Insulation class (IEC 85):	F

Others:

Minimum efficiency index, MEI ≥:	0.57
Net weight:	24.1 kg
Gross weight:	26.9 kg
Shipping volume:	0.063 m^3
Norwegian NRF no.:	9040273

On request CR 5-5 A-A-A-E-HQQE 50 Hz

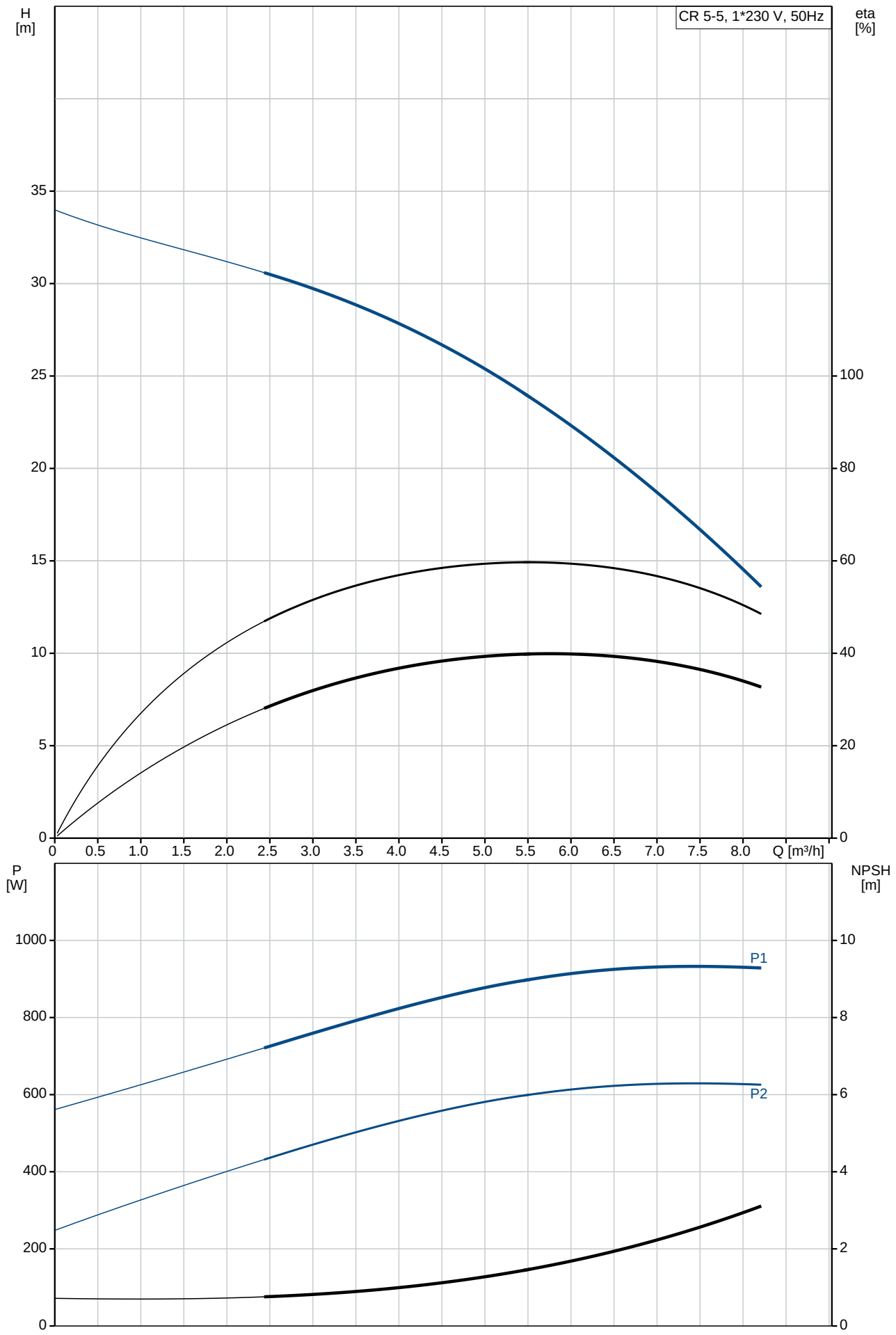

Description	Value
General information:	
Product name:	CR 5-5 A-A-A-E-HQQE
Product No:	On request
EAN number:	On request
Technical:	
Rated flow:	5.8 m³/h
Rated head:	21.7 m
Stages:	5
Impellers:	5
Number of reduced-diameter impellers:	0
Low NPSH:	N
Pump orientation:	Vertical
Shaft seal arrangement:	Single
Code for shaft seal:	HQQE
Approvals on nameplate:	CE, EAC,ACS
Curve tolerance:	ISO9906:2012 3B
Pump version:	A
Model:	A
Materials:	
Base:	Cast iron
	EN 1561 EN-GJL-200
	ASTM A48-25B
Impeller:	Stainless steel
	EN 1.4301
	AISI 304
Material code:	A
Code for rubber:	E
Bearing:	SIC
Installation:	
Maximum ambient temperature:	40 °C
Maximum operating pressure:	16 bar
Max pressure at stated temp:	16 bar / 120 °C
	16 bar / -20 °C
Type of connection:	Oval / Rp
Size of inlet connection:	1 1/4 inch
Size of outlet connection:	1 1/4 inch
Pressure rating for pipe connection:	PN 16
Flange size for motor:	FT100
Connect code:	A
Liquid:	
Pumped liquid:	Water
Liquid temperature range:	-20 .. 120 °C
Liquid temperature during operation:	20 °C
Density:	998.2 kg/m³
Electrical data:	
Motor standard:	IEC
Motor type:	80B
Rated power - P2:	0.75 kW
Power (P2) required by pump:	0.75 kW
Mains frequency:	50 Hz
Rated voltage:	1 x 220-230/240 V
Rated current:	5.10/4.75 A
Starting current:	300 %
Cos phi - power factor:	0.99
Rated speed:	2780 rpm
Efficiency:	72.1%
Motor efficiency at full load:	72.1 %
Number of poles:	2
Enclosure class (IEC 34-5):	55 Dust/Jetting
Insulation class (IEC 85):	F
Motor protec:	PTO
Motor No:	85215104
Controls:	
Frequency converter:	NONE

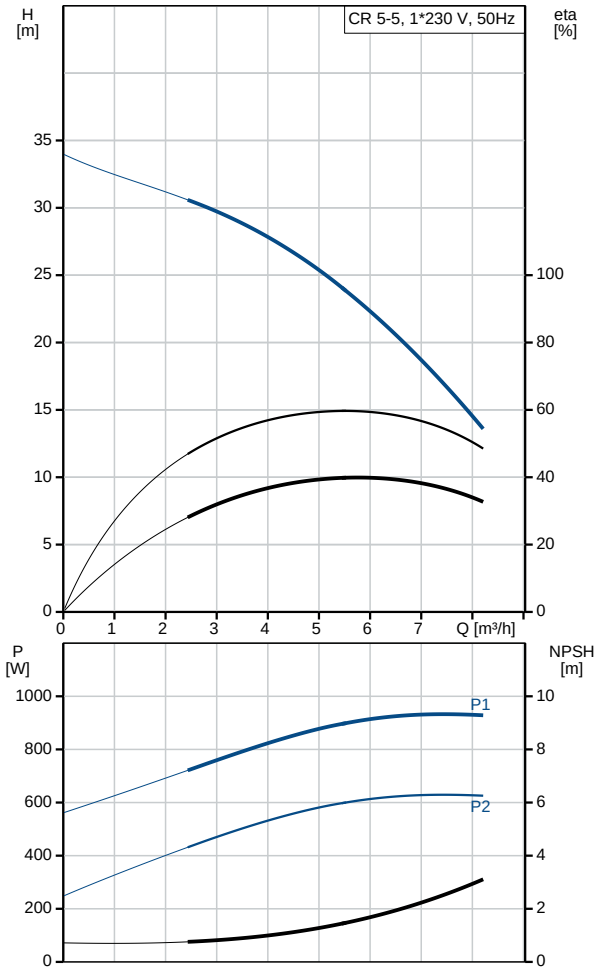

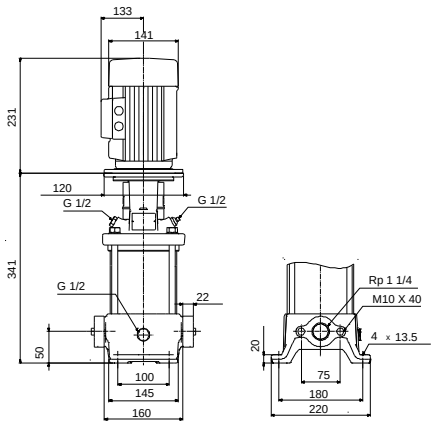

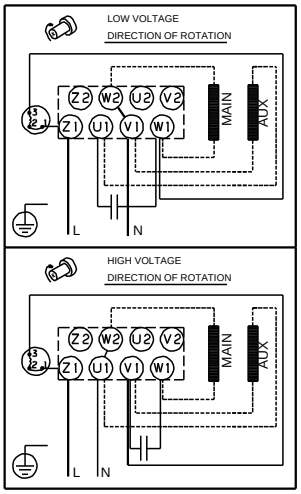

Description	Value
Others:	
Minimum efficiency index, MEI ≥:	0.57
Net weight:	24.1 kg
Gross weight:	26.9 kg
Shipping volume:	0.063 m^3
Norwegian NRF no.:	9040273

On request CR 5-5 A-A-A-E-HQQE 50 Hz

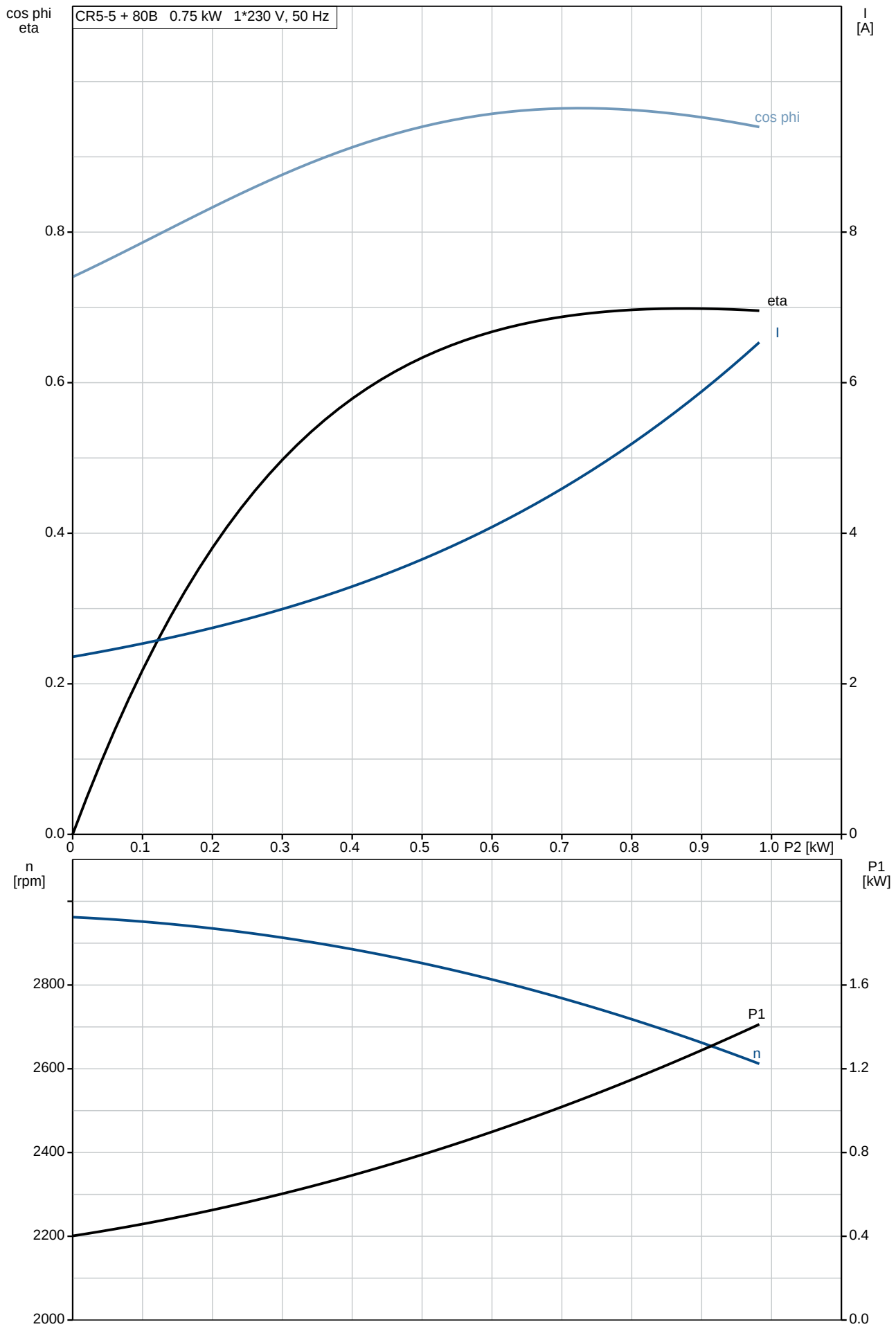

On request CR 5-5 A-A-A-E-HQQE 50 Hz

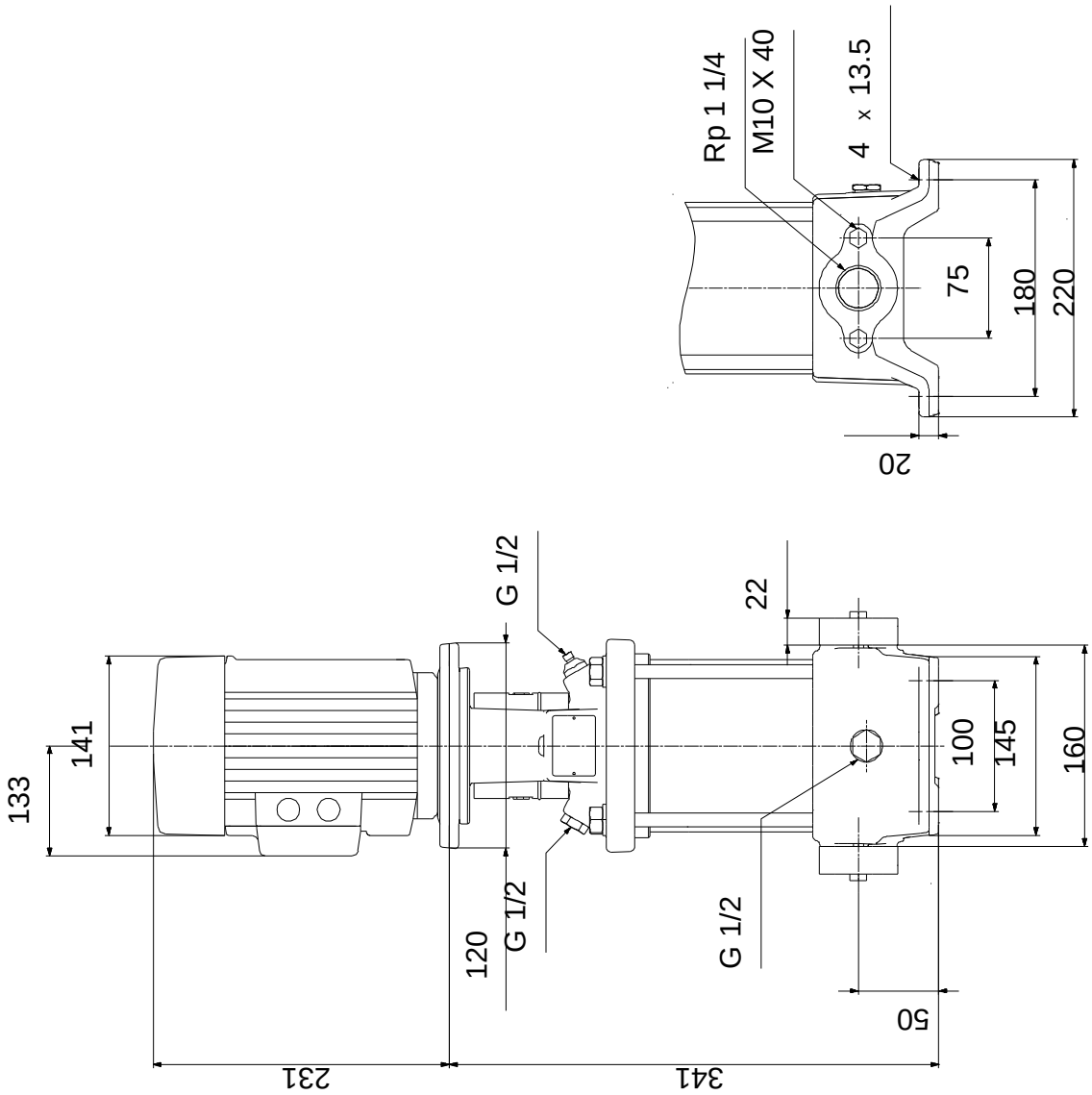

Note! All units are in [mm] unless others are stated.
Disclaimer: This simplified dimensional drawing does not show all details.

Exploded view

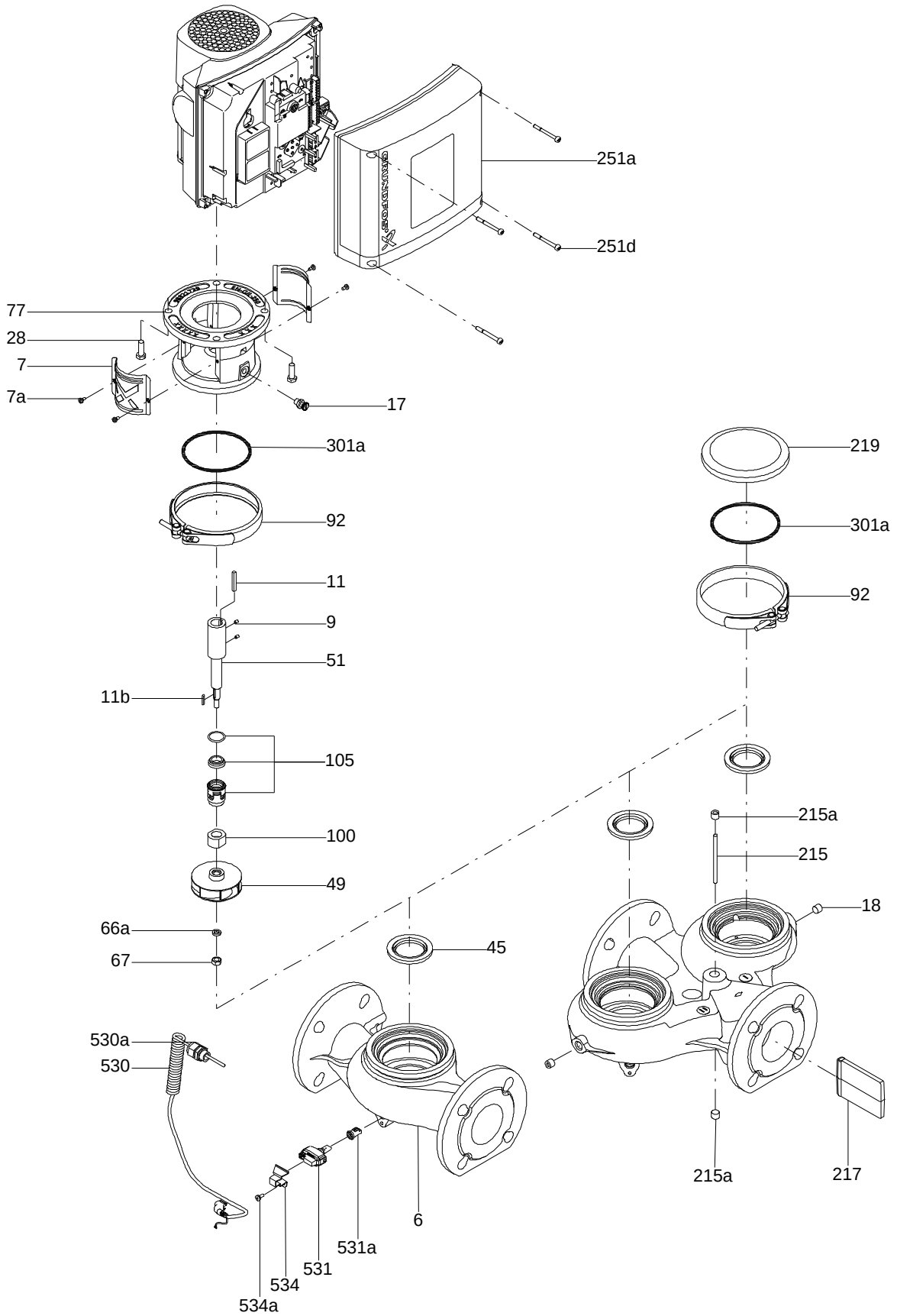

Sectional drawing (TM058200 for TPE2,TPE3)

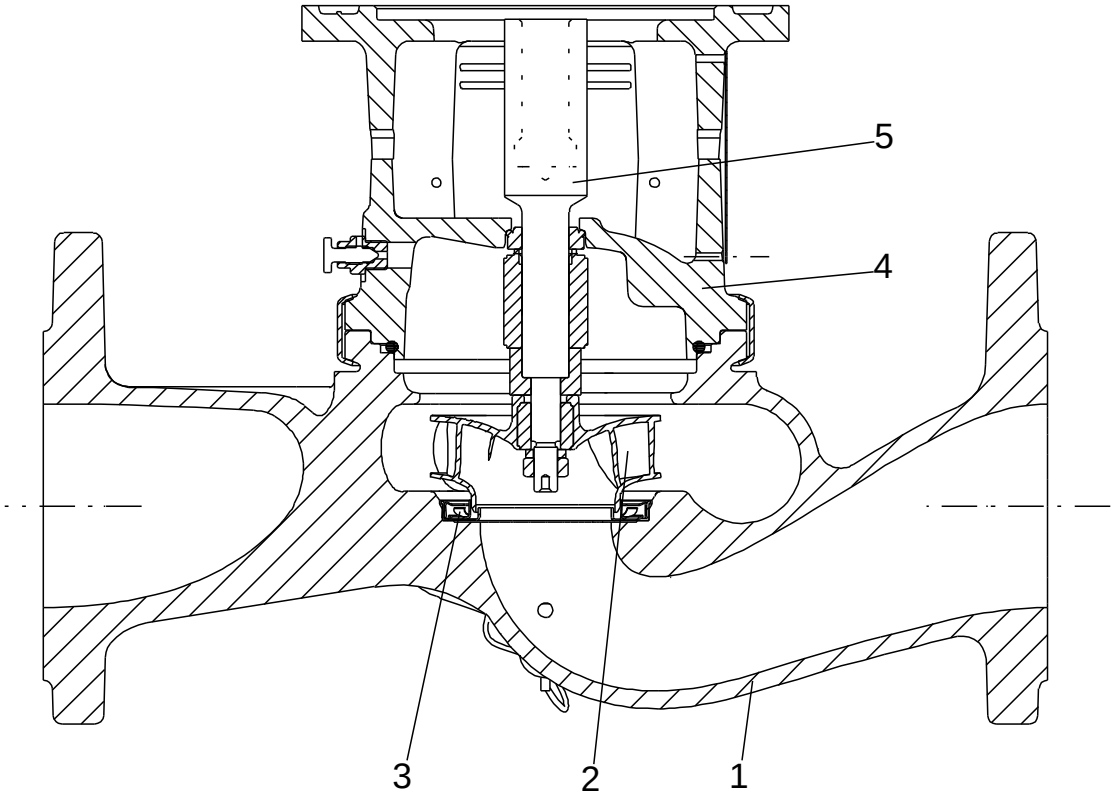

TM058200

Exploded view (TM057026 for MGE model H/I)

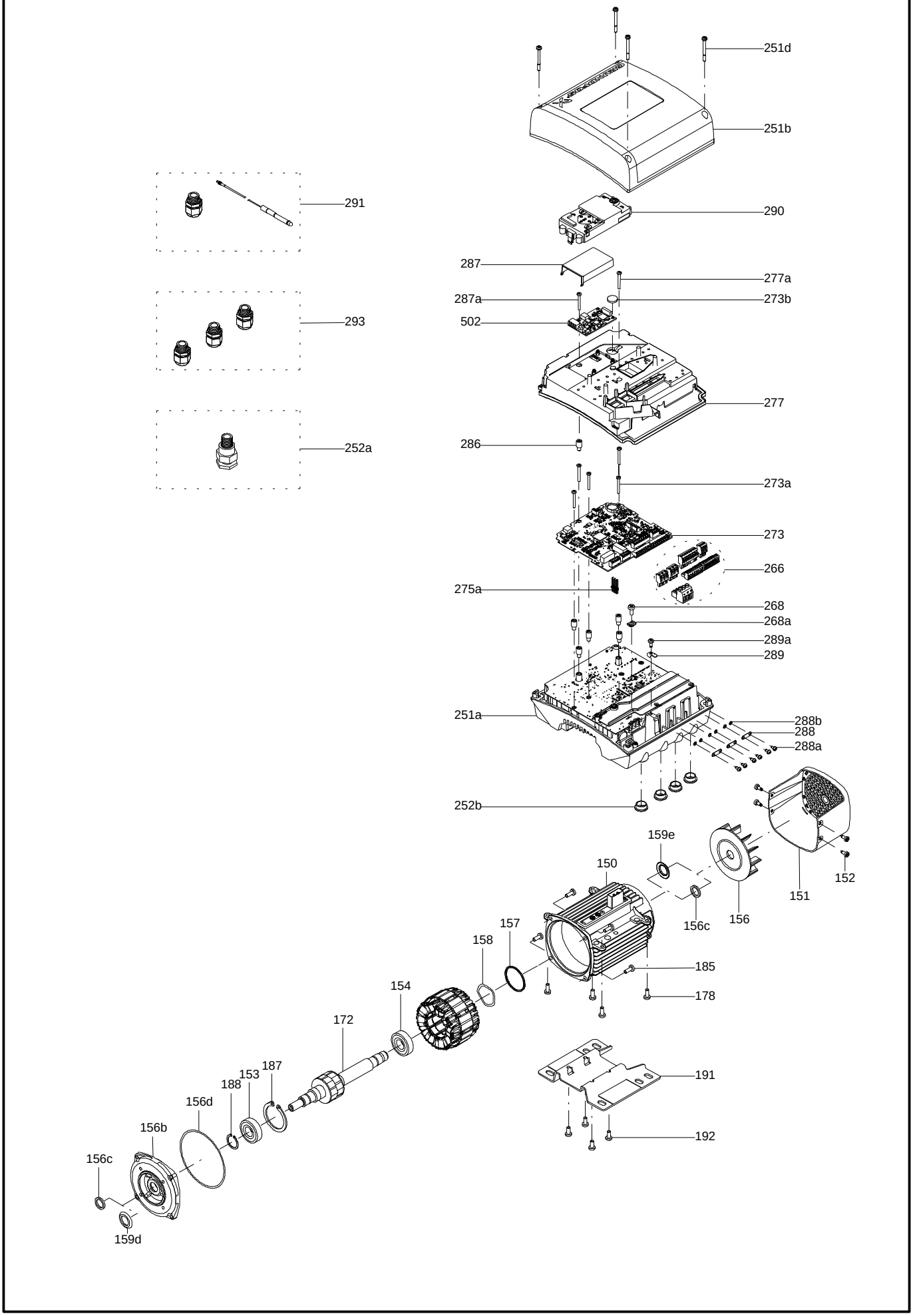

Parts list CR 5-5, Product No. On request
Valid from 1.1.2004 (0401)

	Pos	Description	Annotation	Données de classification	Référence	Quantité	Unité
+		Motor				1	pcs
-		Base cpl.				1	pcs
	6	Base				1	
+	12	Flange		Thread: RP 1		2	
	35	Hex head screw		Length (mm): 40		4	
				Thread: M10			
	39	Gasket				2	
-		Sealing parts				1	pcs
-	25	Drain plug w/bypass valve				1	
	38	O-ring		Diameter: 16,3		1	
				Material type: EPDM			
				Thickness: 2,4			
	37	O-ring				2	
	100	O-ring		Diameter: 16,3		2	
				Material type: EPDM			
				Thickness: 2,4			
-	2	Pump head cpl.				1	pcs
	2	Pump head				1	
	7	Coupling guard				2	
	7a	Combi Slot Torx screw				4	
-	18	Air vent screw				1	
		Plug				1	
		Spindle				1	
	23a	Plug				1	
	28	Hex head screw		Length (mm): 25 MM		4	
				Thread: M6			
	60	Formed wire spring				1	
-	8	Coupling cpl.				1	pcs
	9	Hex socket head cap screw		Designation: DIN 912		4	
				Length (mm): 20			
				Thread: M6			
	10	Shaft pin		Diameter: 5		1	
				Length (mm): 26			
	10a	Coupling half				2	
	26	Staybolt		Length (mm): 157		4	pcs
				Thread: M12			
	36a	Washer		Designation: DIN 125 A		4	pcs
				Internal diameter: 13			
				Outer diameter: 24			
				Thickness: 2,5			
	55	Outer sleeve				1	pcs
	66a	Nut		Thread: M12		4	pcs
-	80	Chamber stack				1	pcs
-	4	Chamber cpl.				3	
		Chamber				1	
		Retainer for seal ring				1	
		Guide vane				6	
		Plate				1	
		Vane				1	
	45	Neck ring				1	
	65	Retainer				1	
-	4a	Chamber w. bearing cpl.				1	
		Chamber				1	
		Retainer for seal ring				1	
		Guide vane				6	
		Retainer for bearing				1	
		Bearing bush				1	
		Vane				1	
	45	Neck ring				1	

	Pos	Description	Annotation	Données de classification	Référence	Quantité	Unité
	65	Retainer				1	
-	5a	Chamber cpl.				1	
		Chamber				1	
	45	Neck ring				1	
	65	Retainer				1	
	36	Lock nut		Thread: M8		1	
	47a	Bearing ring, rotating				1	
	49	Impeller cpl.				5	
-	50a	Guide vane cpl.				1	
		Guide vane				6	
		Plate				1	
	50b	Top plate				1	
-	51	Shaft, spline, cpl.				1	
	51	Shaft				1	
	62	Stop ring				1	
	64a	Spacing pipe		Length (mm): 13.00		1	
	64c	Clamp, splined		Internal diameter: 8,5		1	
				Outer diameter: 15			
	66	Wedge lock washer				1	
	69	Spacing pipe		Length (mm): 26.0		3	
	69	Spacing pipe		Length (mm): 2.00		1	
-	105	Shaft seal		Material type: HQQE		1	pcs
		O-ring				1	
		O-ring				1	
		Seal driver, upper				1	
		Seal driver, lower				1	
		Spacer ring				1	
		Pipe				1	
		Plug				1	
		Plug				1	
		Compression spring				1	
		Socket set screw				1	
	102	O-ring		Diameter: 22,00		1	
				Material type: EPDM			
				Thickness: 2,75			
	103	Seal ring, stationary				1	
	105	Seal ring, rotating				1	
	107	O-ring				1	
	113	Driver				1	

Disclaimer: The information about the Grundfos pump in this document may be outdated.
Data may be subject to alterations without further notice.
Please contact us to verify the data above is still accurate/up-to-date.

All information is copyright Grundfos.

info@lenntech.com
https://www.lenntech.com
tel. +31 152 610 900
fax. +31 152 616 289