REVISIONS				
ZONE	REV	DESCRIPTION	DATE	APPROVED

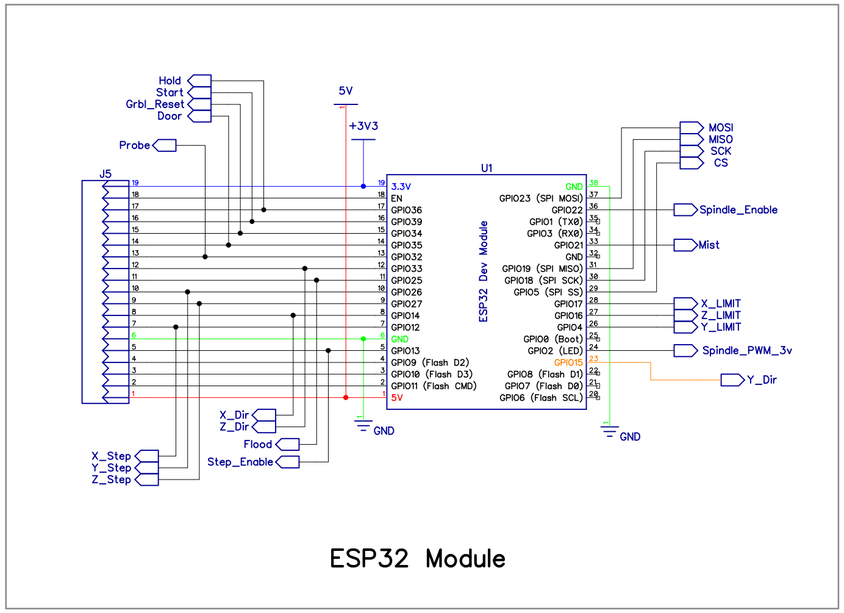

ESP32 Module

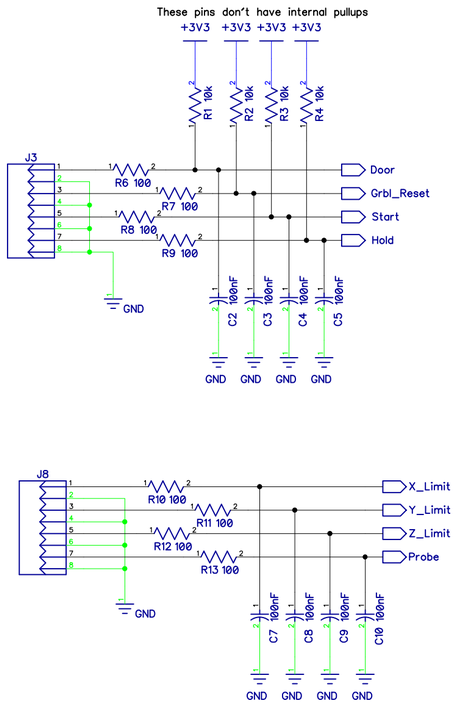

Inputs

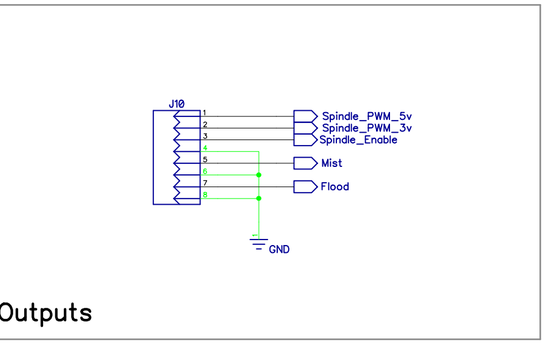

Outputs

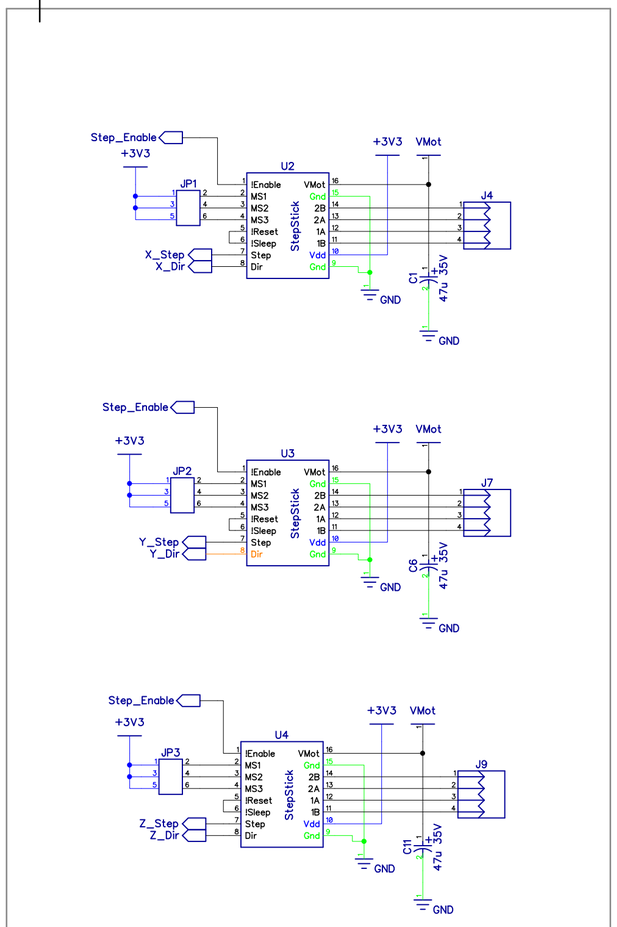

Stepper motor Drivers

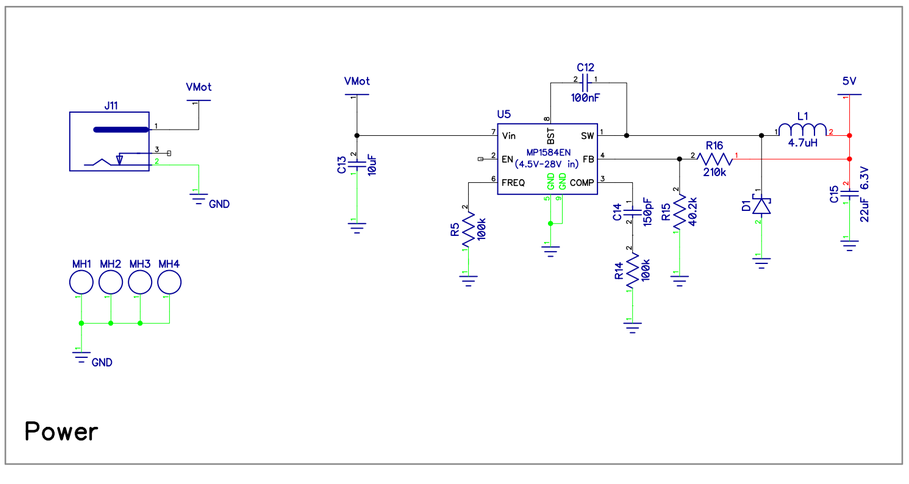

Power

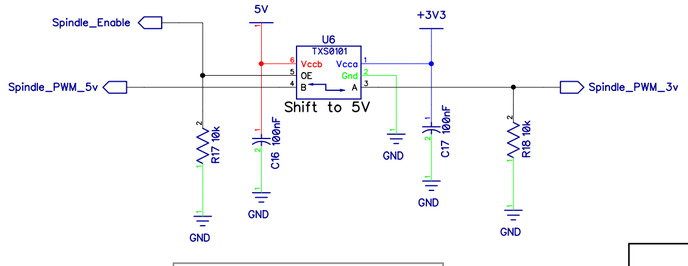

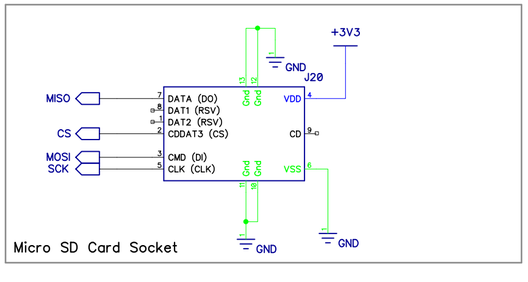

Micro SD Card Socket

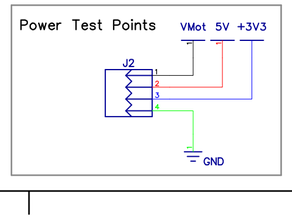

	ESP32 CNC Test PCB V4.1			
	A Test PCB for Grbl-ESP32			
Buildlog.net	SIZE	FSCM NO.	DWG NO.	REV 4.1
	SCALE		Sheet 1	