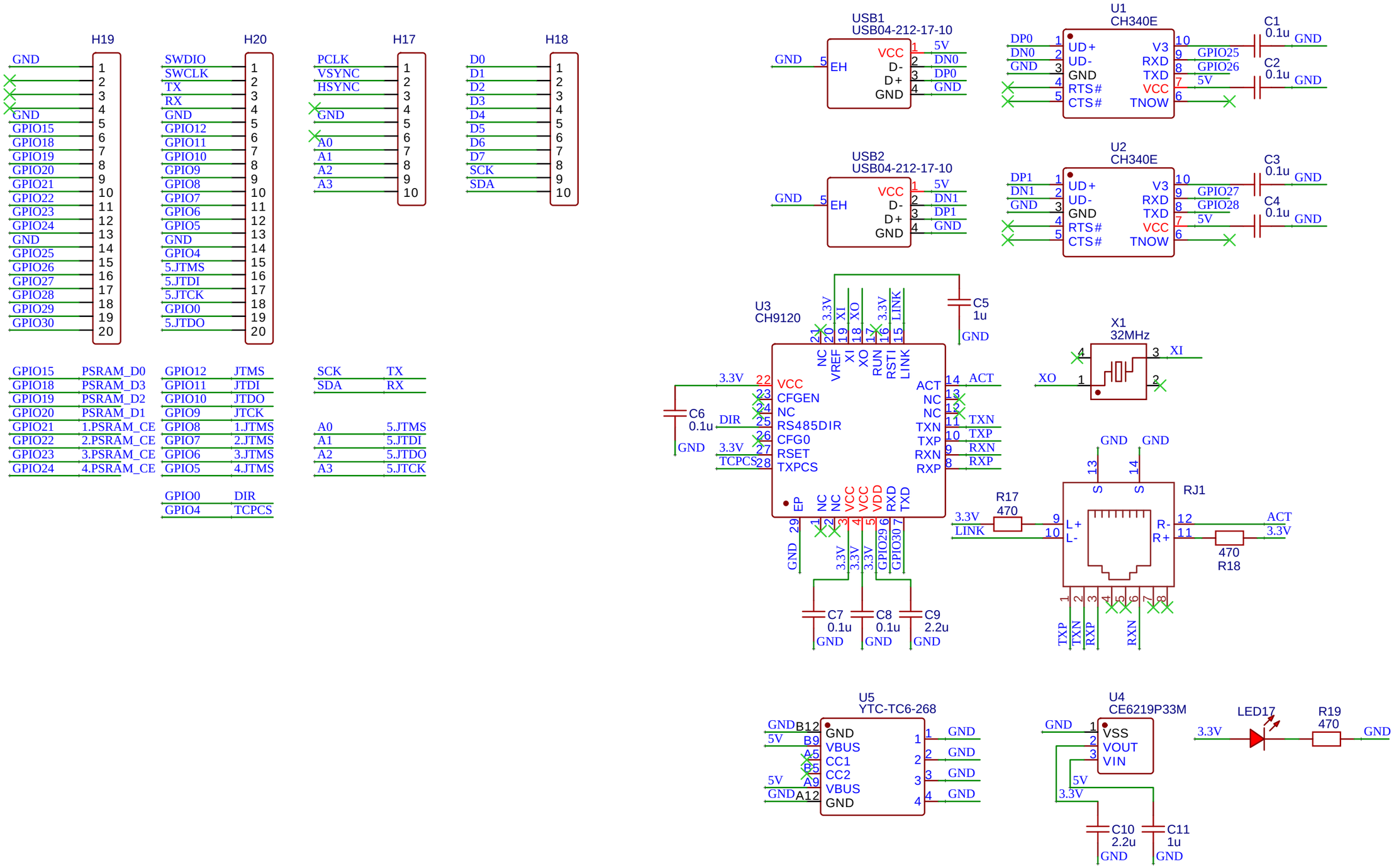

TITLE: Sheet_2	REV: 1.0
嘉立创EDA Company:	Sheet: 1/1
Date:	Drawn By: WenbinTeng